The following list of Reference Drawings will be canceled effective 8 October 1971.

This is not a cumulative listing.

RDG

149

☆U.S. GOVERNMENT PRINTING OFFICE: 1971-484-302/15

The following list of Reference Drawings will be canceled effective 24 September 1971 and transferred to the appropriate Federal Item Identification Guide (FIIG) as shown. This is not a cumulative listing.

RDG	FIIG NO.
395	A239
396	A239
397	A239
400	A239
414	T275,A239
425	A239
431	A239

☆U.S. GOVERNMENT PRINTING OFFICE:1971-484-302/13

The following list of Reference Drawings will be canceled effective 17 September 1971 and transferred to the appropriate Federal Item Identification Guide (FIIG) as shown. This is not a cumulative listing.

RDG'	FIIG NO.
382	A239

☆U.S. GOVERNMENT PRINTING OFFICE: 1971-484-302/12

The following list of Reference Drawings will be canceled effective 10 September 1971 and transferred to the appropriate Federal Item Identification Guide (FIIG) as shown. This is not a cumulative listing.

RDG	FIIG No.
141	A239

☆U.S. GOVERNMENT PRINTING OFFICE: 1971-484-301/11

The following list of Reference Drawings will be canceled effective 3 September 1971 and transferred to the appropropriate Federal Item Identification Guide (FIIG) as shown. This is not a cumulative listing.

RDG	FIIG No.
130	T282
140	T282
271	T282

☆U.S. GOVERNMENT PRINTING OFFICE: 1971-484-301/10

The following list of Reference Drawings will be canceled effective 27 August 1971 and transferred to the appropriate Federal Item Identification Guide (FIIG) as shown. This is not a cumulative listing.

RDG	FIIG No.
99	A153

☆U.S. GOVERNMENT PRINTING OFFICE: 1971-484-301/9

The following list of Reference Drawings will be canceled effective 13 August 1971 and transferred to the appropriate Federal Item Identification Guide (FIIG) as shown. This is not a cumulative listing.

RDG	FIIG No.
123	A105
350	A105
376	A105
403	A105

☆U.S. GOVERNMENT PRINTING OFFICE: 1971-484-300/7

The following list of Reference Drawings will be canceled effective 16 July 1971 and transferred to the appropriate Federal Item Identification Guide (FIIG) as shown. This is not a cumulative listing.

RDG		FIIG No.
Gp 150	Fire Axe Holders	T278
Gp 168	Valve Seat Refacing Pilots	T182
Gp 249	Pipeline Cleaning Elements	T276

☆U.S. GOVERNMENT PRINTING OFFICE: 1971-484-300/3

Cataloging HANDBOOK

H 6-3

SECTION D
Volume 1

355.8
Un 3534
H6-3
See D
vol. 1

Part 3

Federal Item Identification Guides for Supply Cataloging

Reference Drawings

1961

Armed Forces Supply Support Center
Washington 25, D.C.

This handbook, "Federal Item Identification Guides for Supply Cataloging", is issued under the authority of Department of Defense Directives 4130.2 and 5154.14 and Department of Defense Instruction 5025.4.

The use of this publication is mandatory on military activities participating in Federal Catalog System operations.

HERMAN C. HANGEN
Director
Armed Forces Supply Support Center

REFERENCE DRAWINGS
Section D

This Section of Part 3 of the Federal Item Identification Guides for Supply Cataloging contains the reference drawings applicable to the description patterns which may be classified in two or more FSC Groups, and where those patterns are represented in Section A or two or more sections B through J of Part 2 Item Identification Guides for Supply Cataloging. They are intended for use in preparing descriptive-method item identifications in the Federal Catalog System.

FSC	35	Service and Trade Equipment
	40	Rope, Cable, Chain, and Fittings
	42	Fire Fighting, Rescue, and Safety Equipment
	49	Maintenance and Repair Shop Equipment
	81	Containers, Packaging, and Packing Supplies

NOTE: User must have Section A in addition to this Section for complete coverage of the FSC areas included.

Armed Forces Supply Support Center
Washington 25, D.C.

The Foreword and Introduction will be found in the first volume of the corresponding section of Cataloging Handbook H 6–2, Description Patterns.

Copies of this publication may be obtained from, or in accordance with, the following:

DEPARTMENT OF THE ARMY

Appropriate Adjutant General (AG) publication channels as prescribed in Army Regulation AR310-1. (Include Army publication number.)

DEPARTMENT OF THE NAVY

Commanding Officer, U. S. Naval Supply Depot, 5801 Tabor Ave., Philadelphia 20, Pennsylvania.

DEPARTMENT OF THE AIR FORCE

Wright-Patterson Air Force Base, Attn: EWBFE Dayton, Ohio, in accordance with USAF S-2A-1, Index.

MARINE CORPS

In accordance with Part II, List of Marine Corps Activities, Publications Allowance and Distribution, NAVMC 1090-ADM (next revision to be promulgated as Marine Corps Order, P5605 series).

CIVIL AGENCIES

General Services Administration (GSA)

Regulation, Part 3, Cataloging, Section 1-VI-302.03.

This is a cumulative listing of revisions to the basic index of reference drawings for Cataloging Handbook H 6-3, Section D, dated 31 December 1963.

This list supersedes the cumulative listing dated 14 March 1969.

Gp 130	Safety Belts, Harnesses, and Straps.....	7 Pgs
	Pages 1-7.....	14 Mar. 69
Gp 394	Breechblock Holding Tools .....Canc.....	28 May 71
Gp 401	Gun Barrel Reflectors .....Canc.....	28 May 71

Reference Drawings

This is a cumulative listing of revisions to the basic index of reference drawings for Cataloging Handbook H 6-3, Section D, dated 31 December 1963.

This list supersedes the cumulative listing dated 16 September 1966.

Gp 130	Safety Belts, Harnesses, and Straps.....	7 Pgs
	Pages 1-7.....	14 Mar 69

Sec - D.

v.3

Reference Drawings

Gp 99	Conversion Table for Cordage Items.....	1 Pg
	Page 1.....	3 Apr. 61
Gp 123	Wire Rope Socket Styles.....	7 Pgs
	Pages 1-7.....	15 Feb. 63
Gp 130	Safety Belts, Harnesses, and Straps.....	5 Pgs
	Pages 1-5.....	3 Apr. 61
Gp 140	Industrial Face Shields.....	4 Pgs
	Pages 1-4.....	14 July 61
Gp 141	Hand-Held Welding Shields.....	2 Pgs
	Pages 1-2.....	3 Apr. 61
Gp 149	Fire Extinguisher Brackets.....	6 Pgs
	Pages 1-6.....	14 July 61
Gp 150	Fire Axe Holders.....	3 Pgs
	Pages 1-3.....	3 Apr. 61
Gp 168	Valve Seat Refacing Pilots.....	4 Pgs
	Pages 1-4.....	3 Apr. 61
Gp 249	Pipeline Cleaning Elements.....	2 Pgs
	Pages 1-2.....	3 Apr. 61
Gp 271	Protections Afforded by Filters and Chemical Cartridges.....	3 Pgs
	Pages 1-3.....	3 Apr. 61
Gp 350	Wire Rope Socket Wedges.....	3 Pgs
	Pages 1-3.....	3 Apr. 61
Gp 376	Quick-Disconnect Wire Rope Coupling.....	1 Pg
	Page 1.....	3 Apr. 61
Gp 382	Adapters for Spark Plug Cleaners.....	1 Pg
	Page 1.....	3 Apr. 61
Gp 395	Artillery Cartridge Remover(s).....	1 Pg
	Page 1.....	3 Apr. 61
Gp 396	Equilibrator Cylinder Wrench Guide(s).....	1 Pg
	Page 1.....	3 Apr. 61
Gp 397	Equilibrator Piston Rod Lock(s).....	1 Pg
	Page 1.....	3 Apr. 61

(Continued)

Reference Drawings

Gp 400	Borescope Tube Supports.....	2 Pgs
	Pages 1-2.....	3 Apr. 61
Gp 401	Gun Barrel Reflectors.....	1 Pg
	Page 1.....	3 Apr. 61
Gp 403	Wire Rope Drum Clamp Wedges.....	1 Pg
	Page 1.....	3 Apr. 61
Gp 414	Recoil Mechanism---Equilibrator Charging Regulators and Adapter End Connections...	1 Pg
	Page 1.....	3 Apr. 61
Gp 425	Gun Recoil Spring Compressors.....	5 Pgs
	Pages 1-5.....	3 Apr. 61
Gp 431	Boresight Alignment Target Assemblies.....	7 Pgs
	Pages 1-7.....	27 Oct. 61

Conversion Table for Cordage Items

Nominal Circumference (Inches)	*Nominal Diameter (Inches)*
5/8	3/16
3/4	1/4
1	5/16
1 1/8	3/8
1 1/4	7/16
1 1/2	1/2
1 3/4	9/16
2	5/8
2 1/4	3/4
2 1/2	13/16
2 3/4	15/16
3	1
3 1/4	1 1/6
3 1/2	1 1/8
3 3/4	1 1/4
4	1 5/16
4 1/2	1 1/2
5	1 5/8
5 1/2	1 3/4
6	2
7	2 1/4
8	2 5/8
9	3
10	3 1/4
11	3 5/8
12	4

Wire Rope Socket Styles

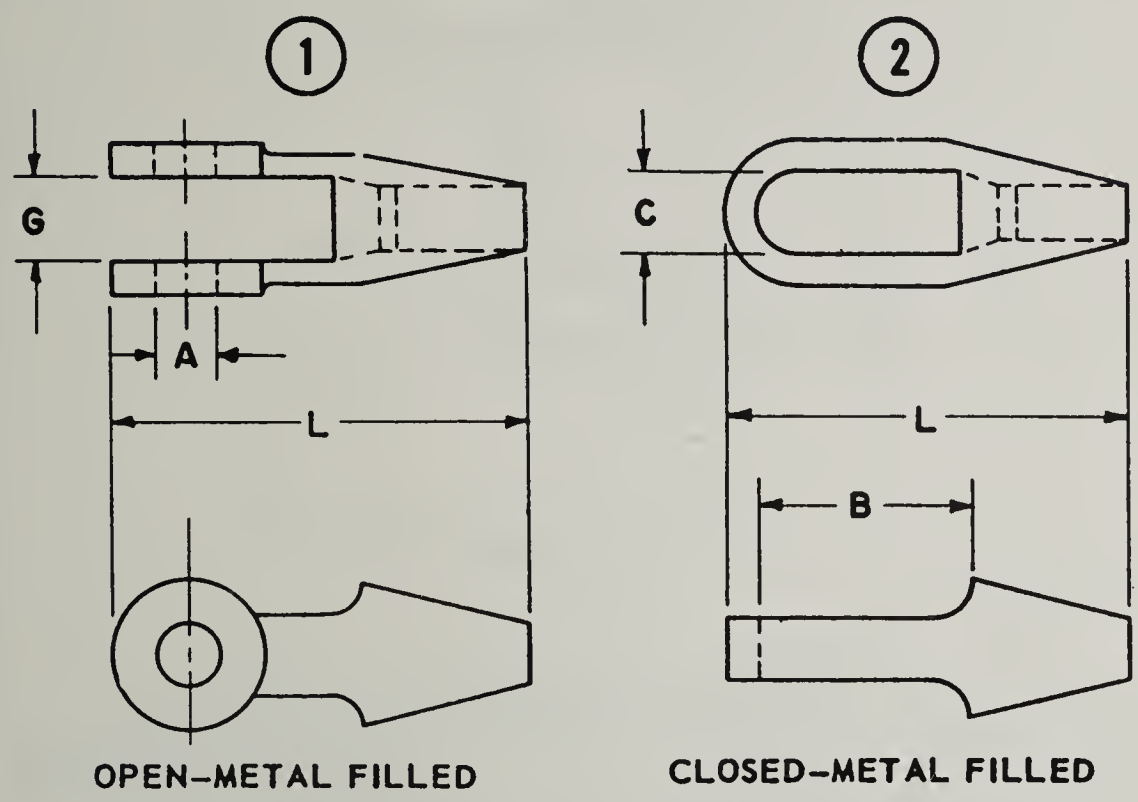

LEGEND

A—Diameter of bolt hole
B—Inside length of eye
C—Inside width of eye
D—Bolt or stud diameter
E—Hexagon body size (distance across flats)
F—Toggle head diameter
G—Distance between jaws
H—Thickness
L—Over-all length

Ref Dwg Group 123	PART 3 Federal Item Identification Guides for Supply Cataloging

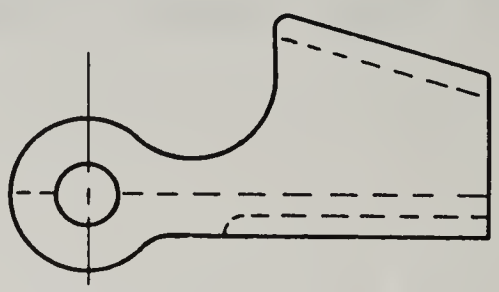

SIDE VIEW–STYLES 3 AND 4

3

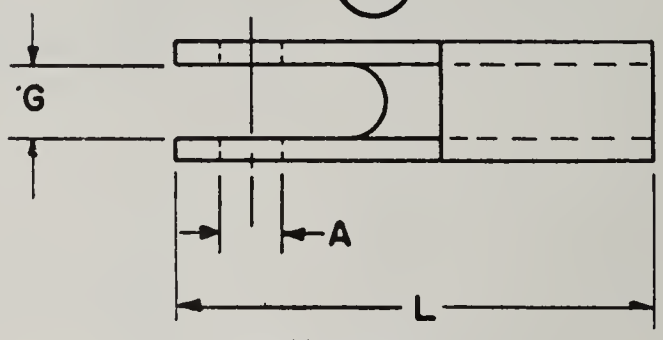

OPEN WEDGE

4

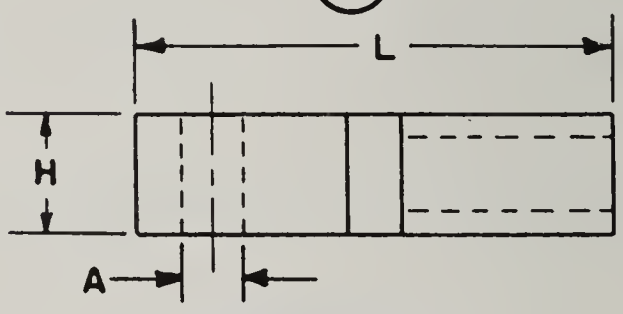

CLOSED WEDGE

5

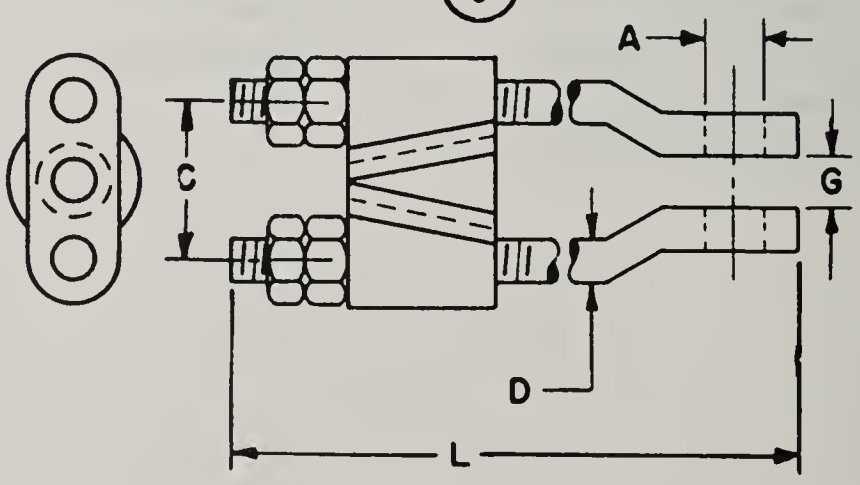

OPEN BRIDGE

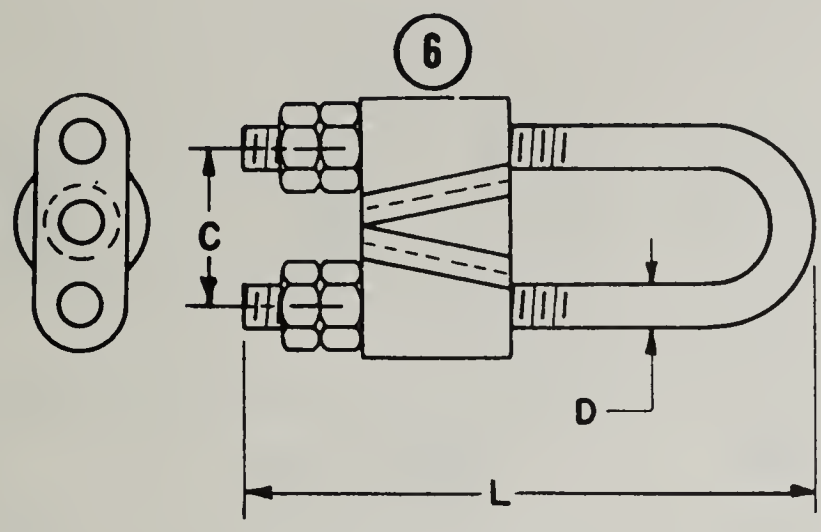

CLOSED BRIDGE

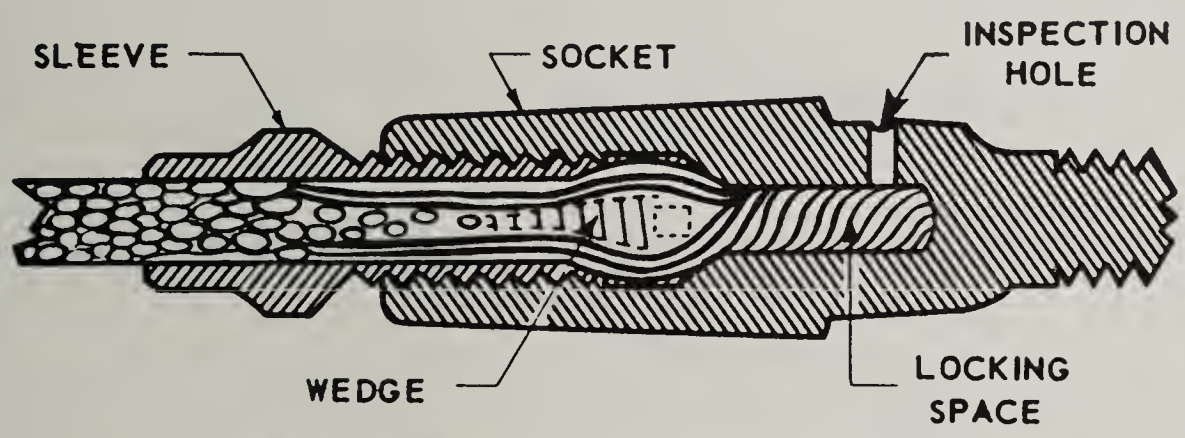

CUT-AWAY DRAWING OF STYLES 7 THROUGH 16

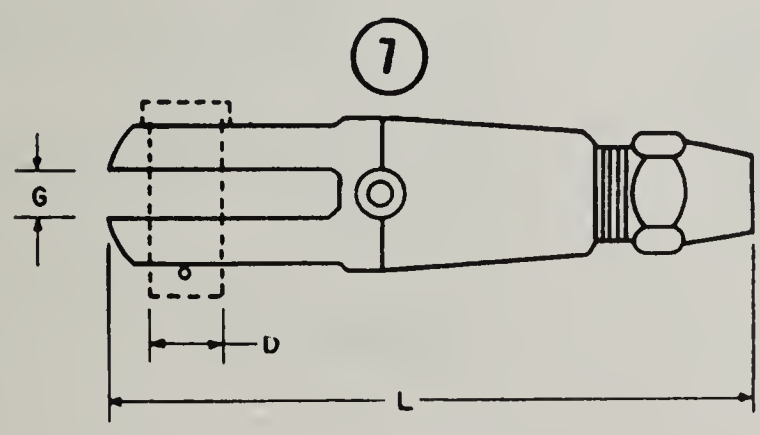

OPEN TYPE

Ref Dwg Group 123	PART 3 Federal Item Identification Guides for Supply Cataloging

8

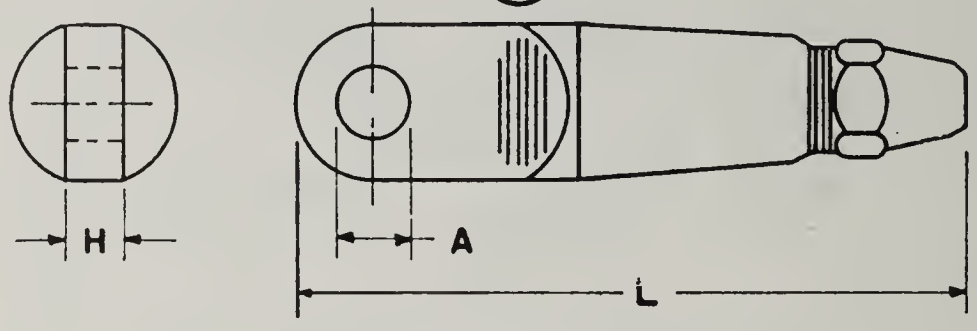

CLOSED TYPE

9

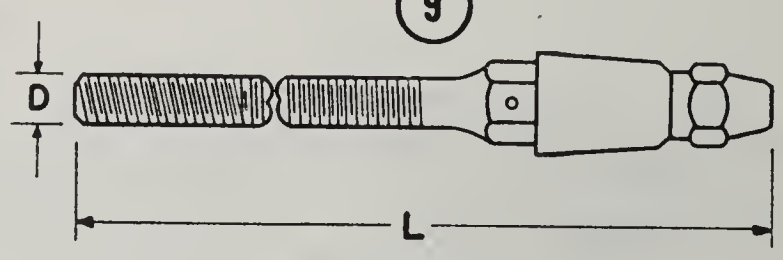

STUD END TYPE

10

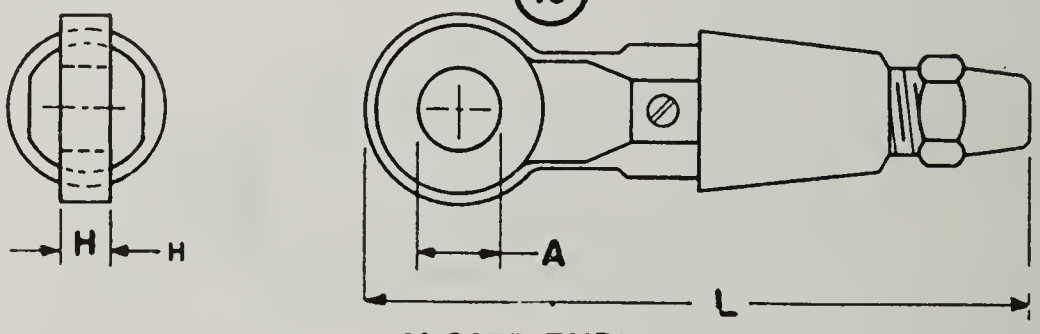

CLOSED TYPE

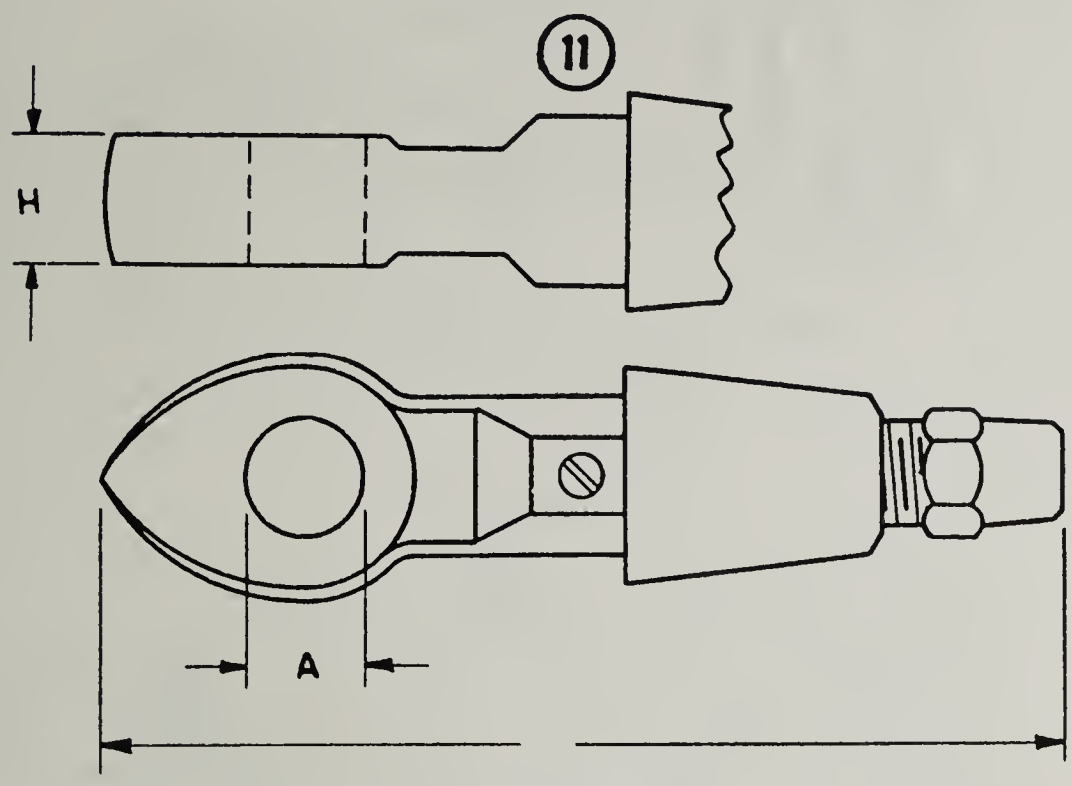

CLOSED TYPE

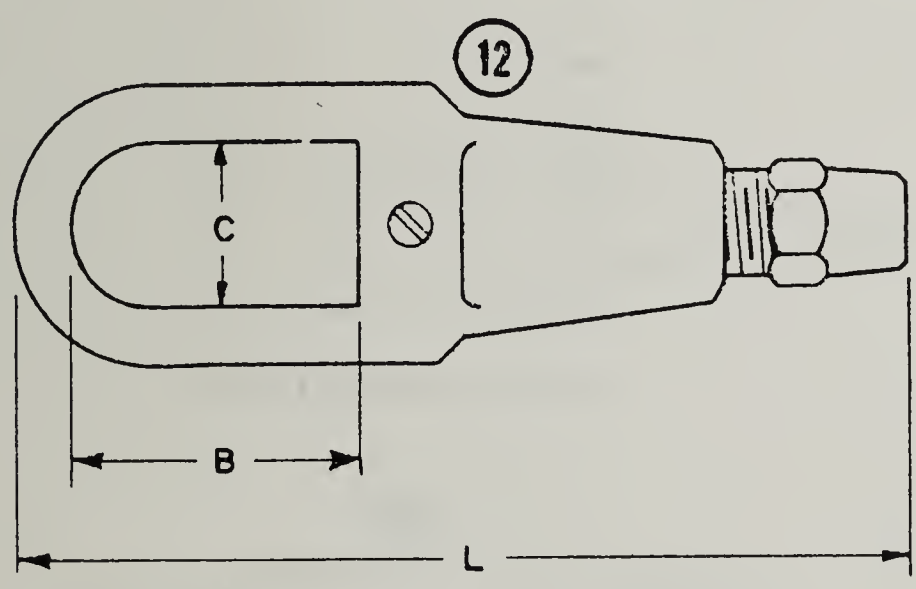

CLOSED TYPE

Ref Dwg Group 123	PART 3 Federal Item Identification Guides for Supply Cataloging

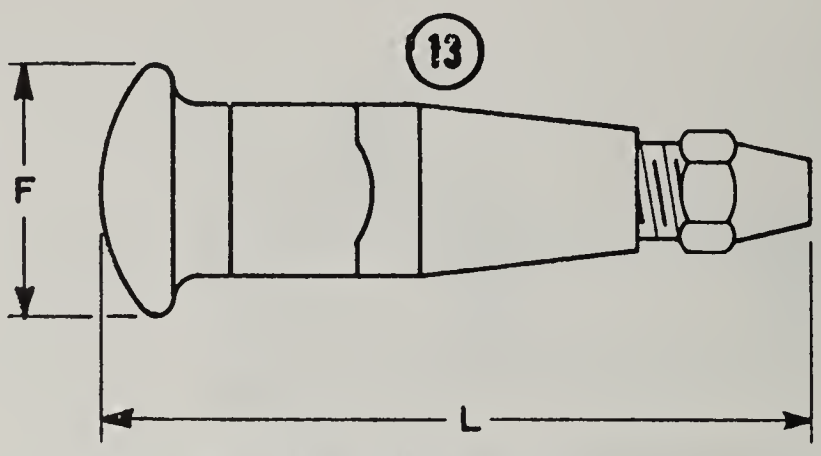

TOGGLE HEAD TYPE

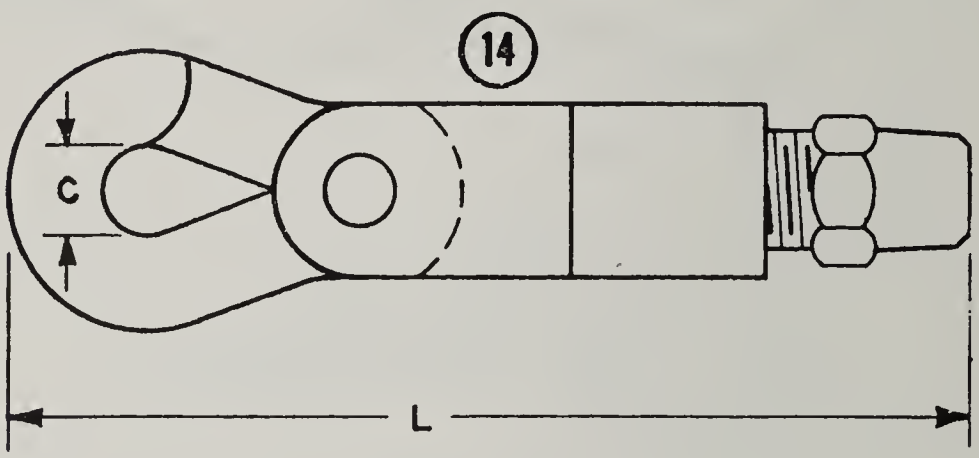

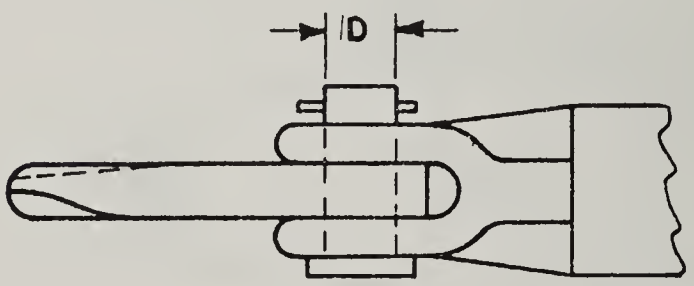

LIFELINE HOOK TYPE

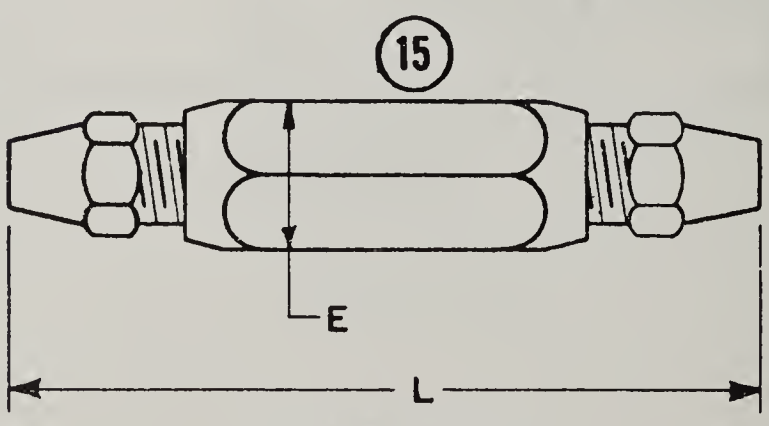

COUPLING TYPE

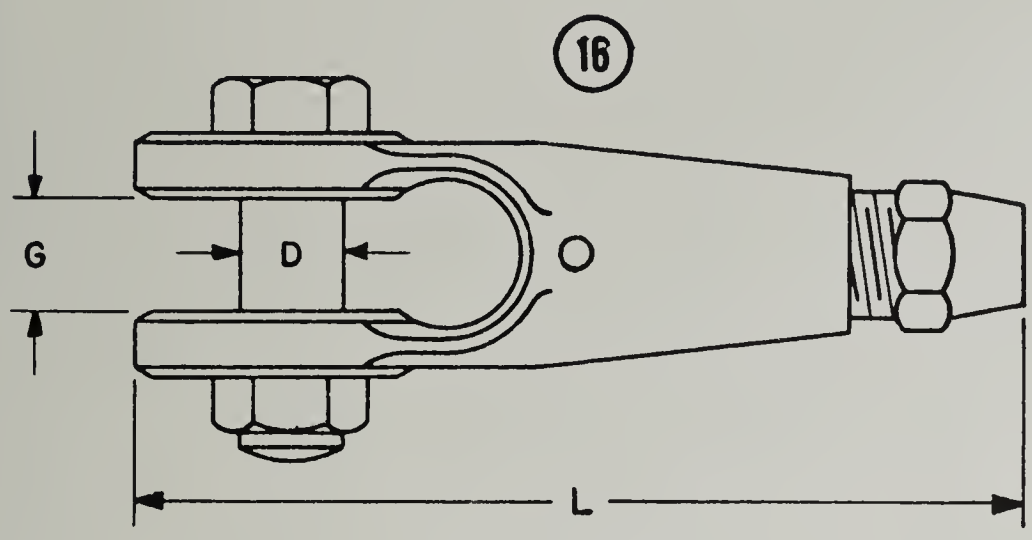

OPEN TYPE

Safety Belts, Harnesses, and Straps

Section A — Belts

1

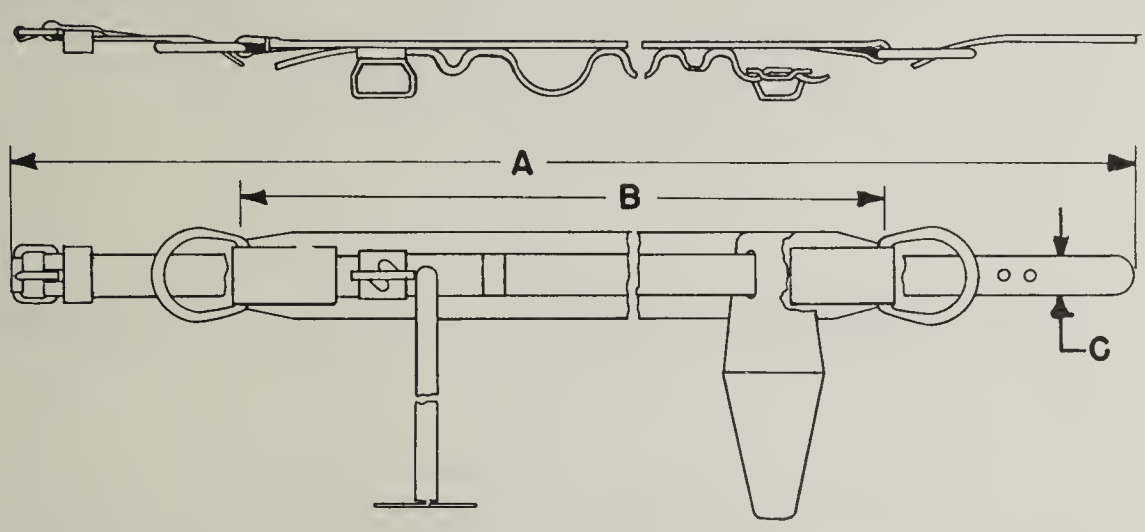

LINEMAN'S TYPE
(Without Cushion Pad)

2

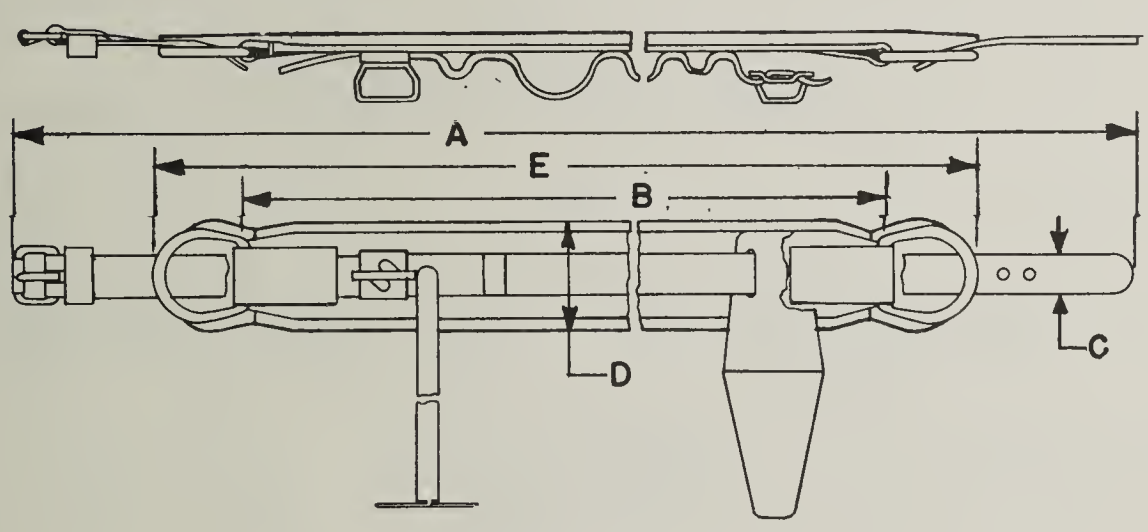

LINEMAN'S TYPE
(With Cushion Pad)

LEGEND

A—Over-all length of body belt
B—Distance between "D" rings
C—Width of body belt
D—Width of cushion pad
E—Length of cushion pad

Replaces RDG 130 dtd 16 Sept 66 in its entirety.

Section A — Belts

3

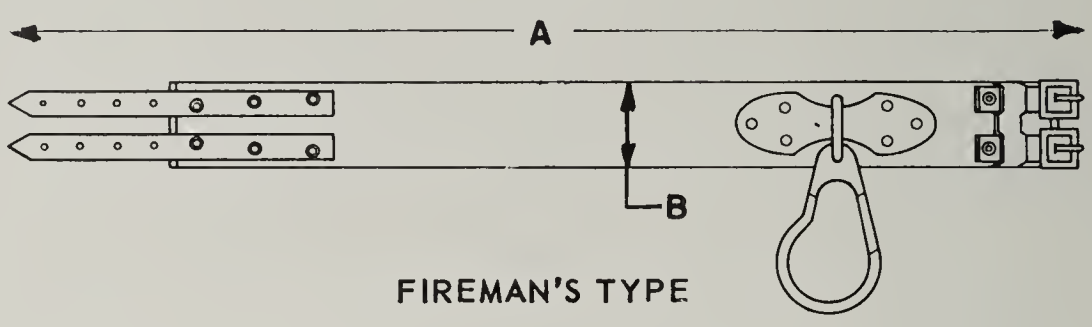

FIREMAN'S TYPE

4

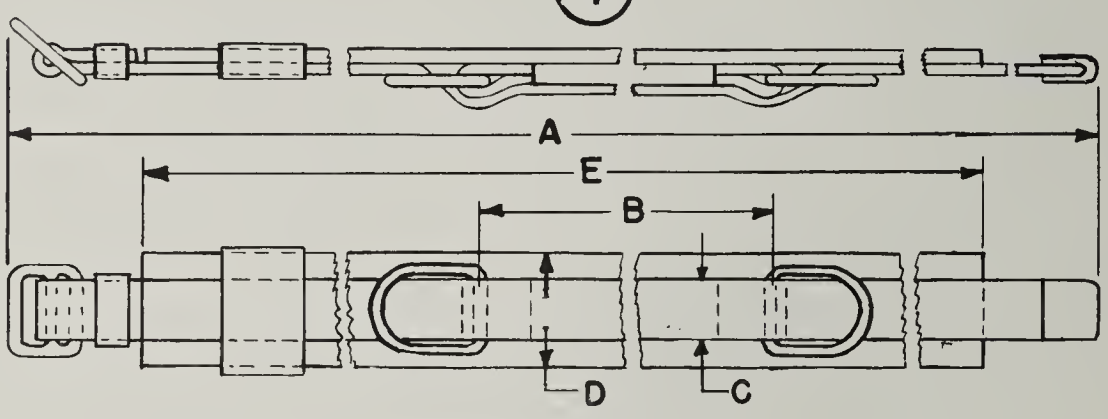

LINEMAN'S TYPE

5

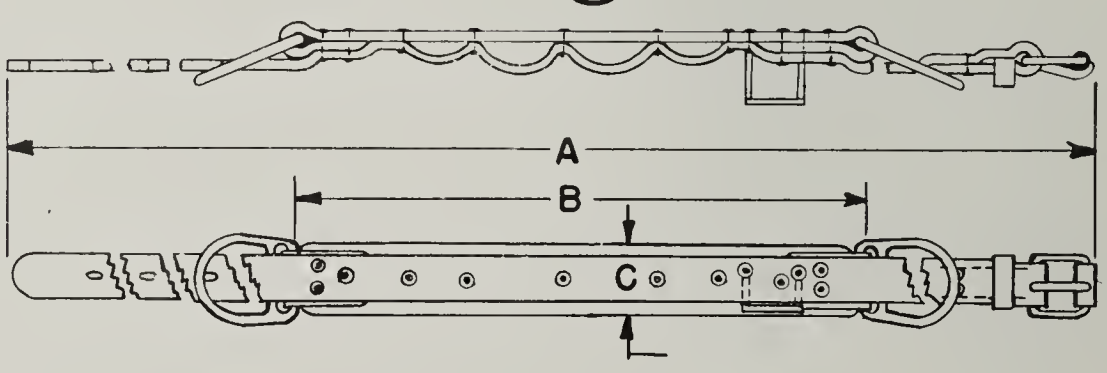

ELECTRICIAN'S TYPE

6

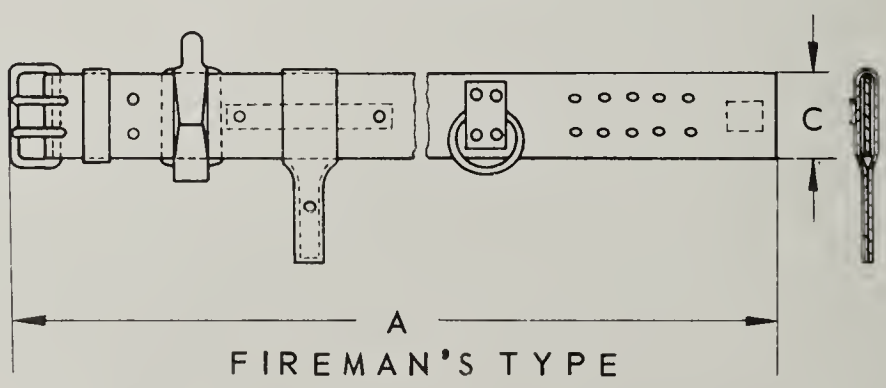

FIREMAN'S TYPE

SECTION A– BELTS

7

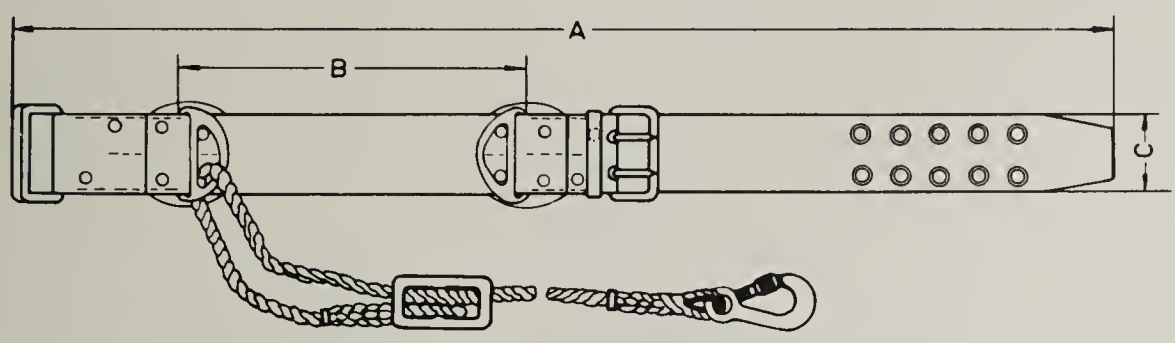

LINEMAN'S-TYPE

8

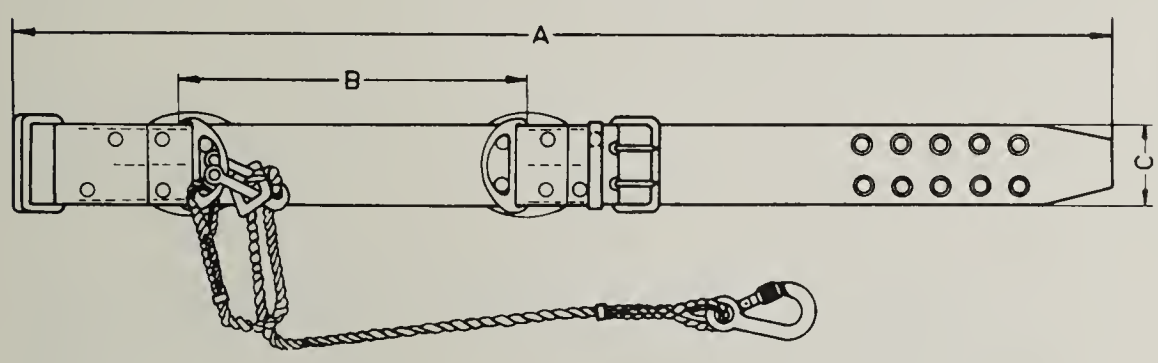

LINEMAN'S-TYPE

9

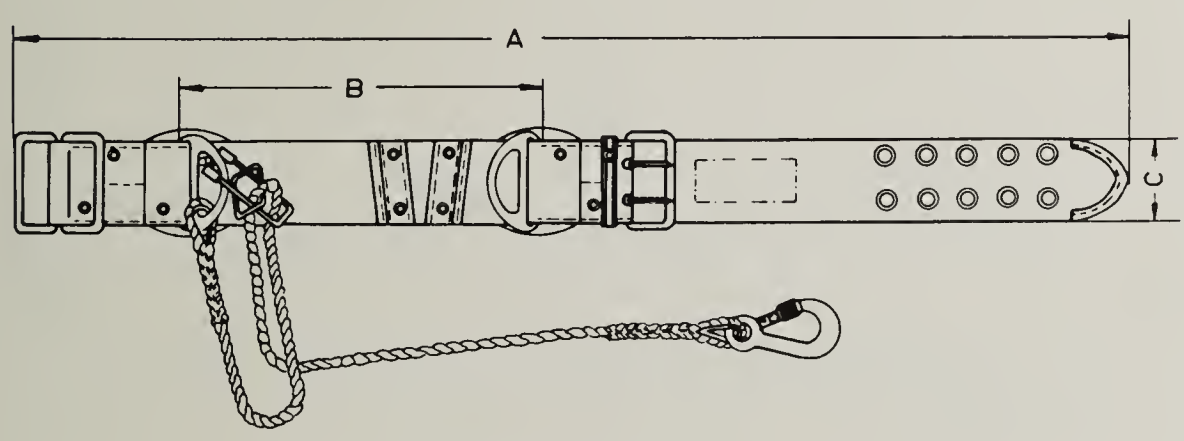

RIGGER-TYPE

Section B — Straps

1

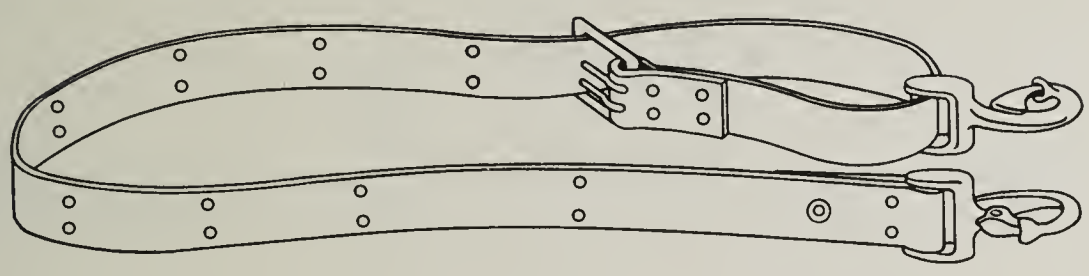

2

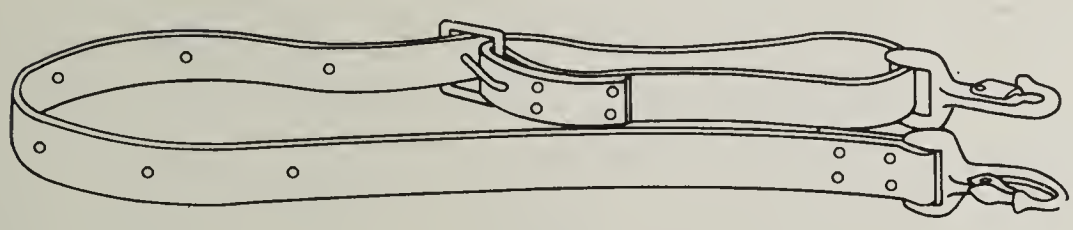

3

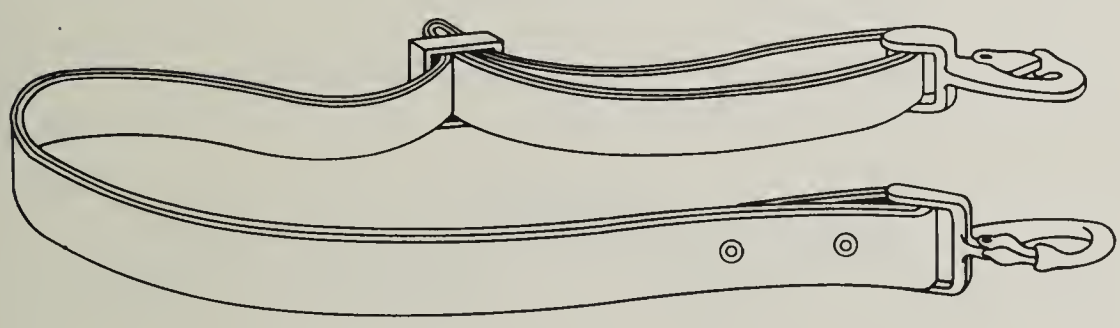

Section C — Harnesses

1

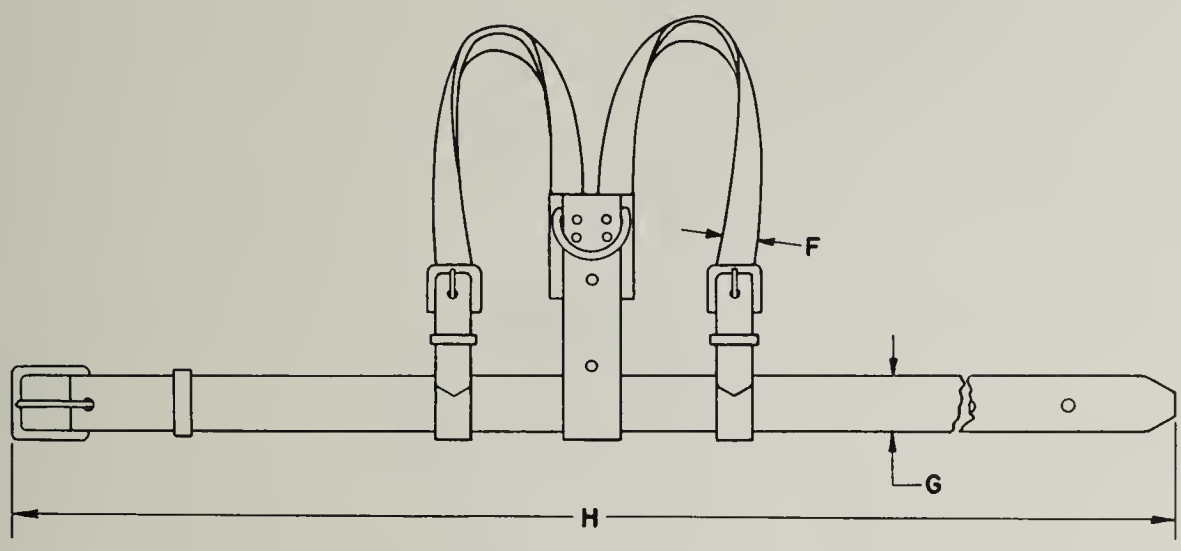

2

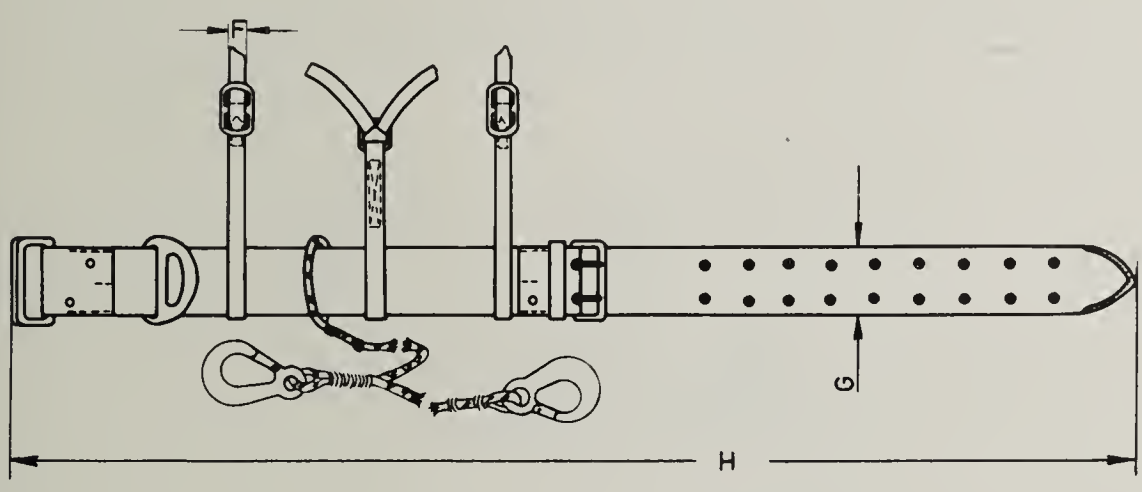

LEGEND

F—Width of shoulder strap
G—Width of waist band
H—Over-all length of waist band

☆ U. S. GOVERNMENT PRINTING OFFICE : 1969 345-187/30

Industrial Face Shields

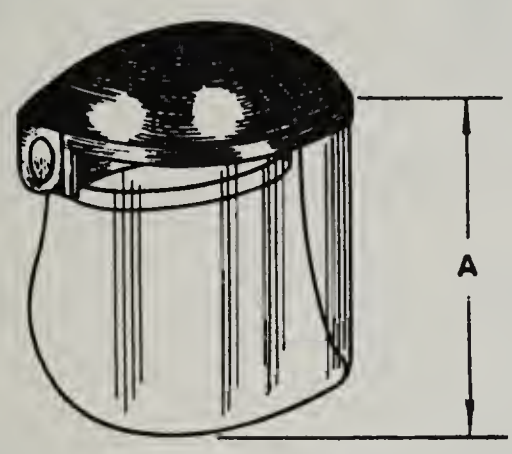

PLASTIC VISOR
WITH SEMISKULL GUARD

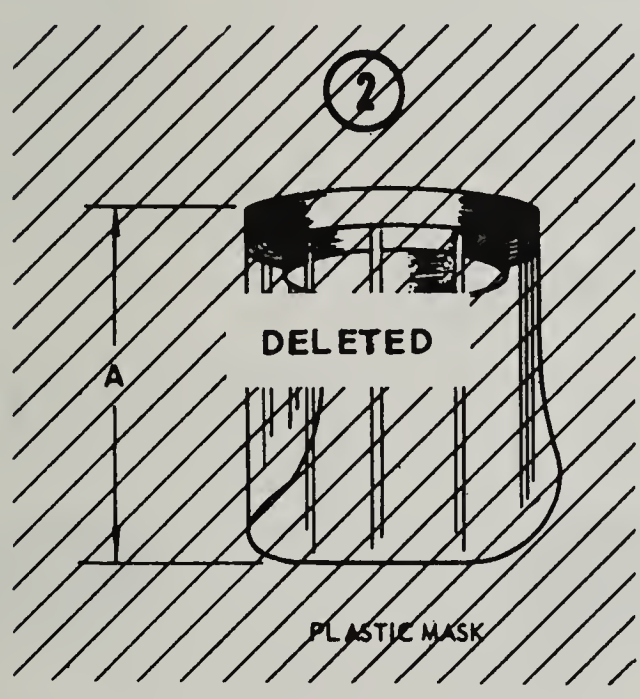

LEGEND

A—Length of visor

Ref Dwg Group 140	PART 3 Federal Item Identification Guides for Supply Cataloging

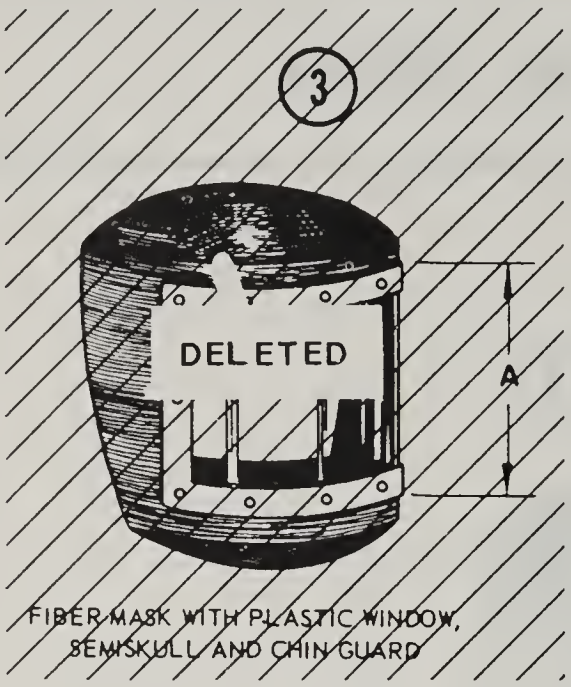

FIBER MASK WITH PLASTIC WINDOW, SEMISKULL AND CHIN GUARD

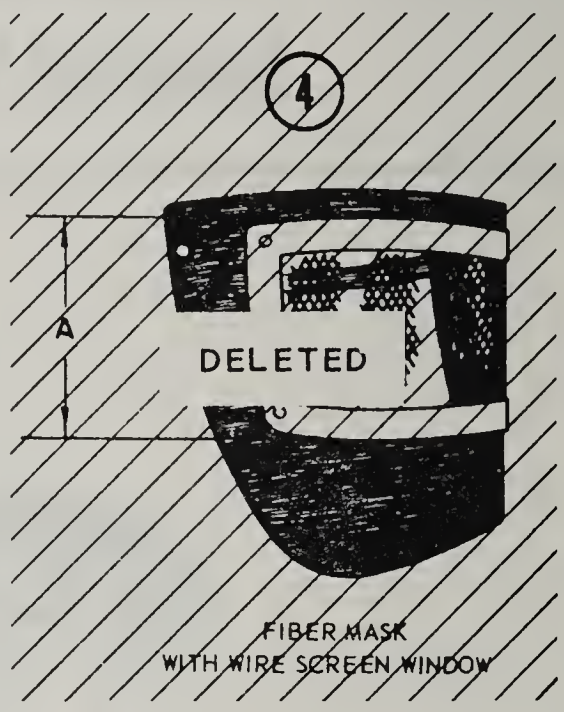

FIBER MASK WITH WIRE SCREEN WINDOW

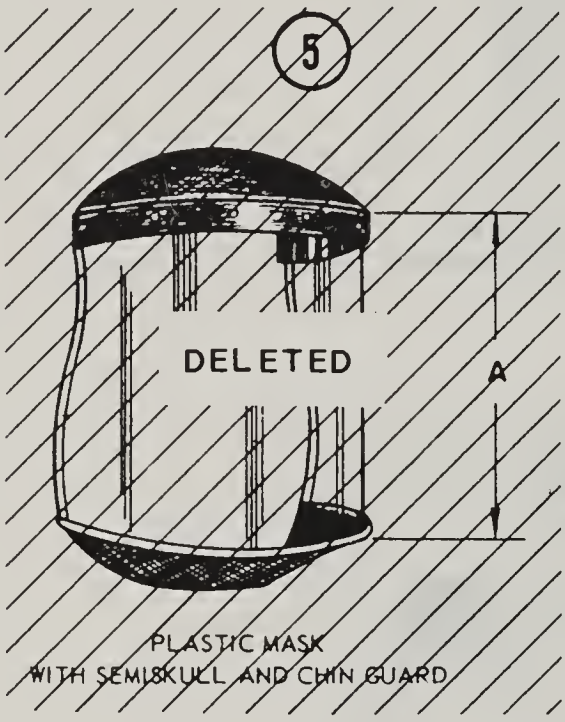

PLASTIC MASK WITH SEMISKULL AND CHIN GUARD

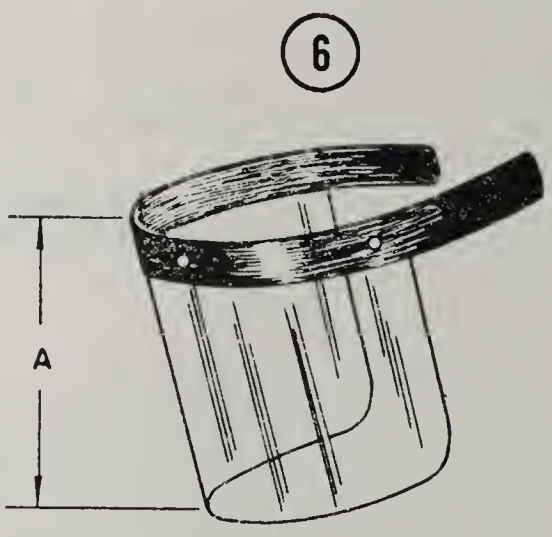

PLASTIC VISOR

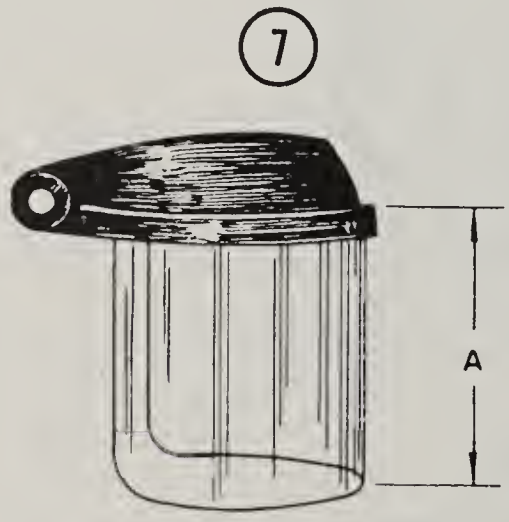

PLASTIC VISOR WITH FOREHEAD GUARD

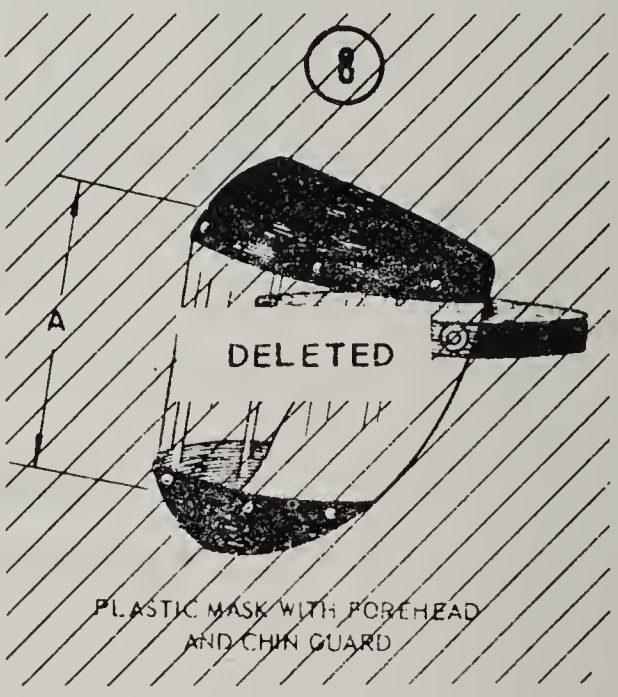

PLASTIC MASK WITH FOREHEAD AND CHIN GUARD

PART 3 Federal Item Identification Guides for Supply Cataloging	Ref Dwg Group 140

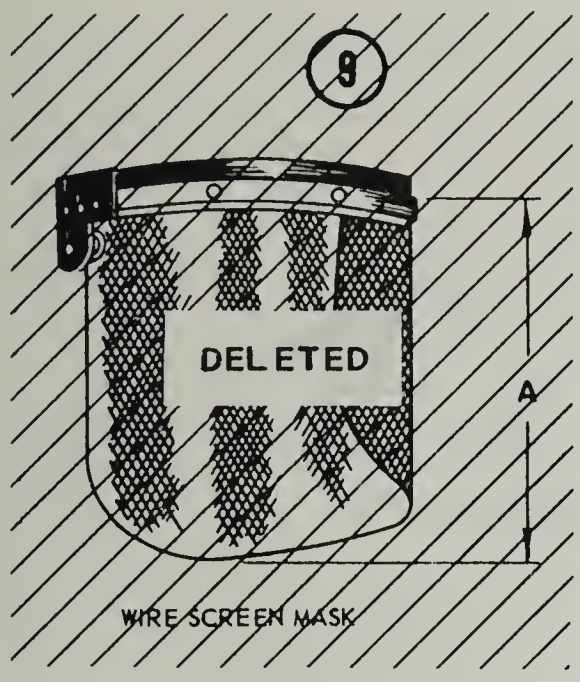

WIRE SCREEN MASK

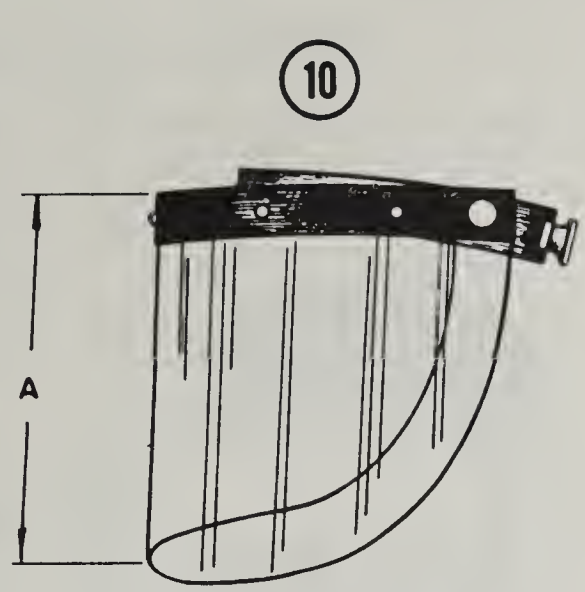

PLASTIC VISOR

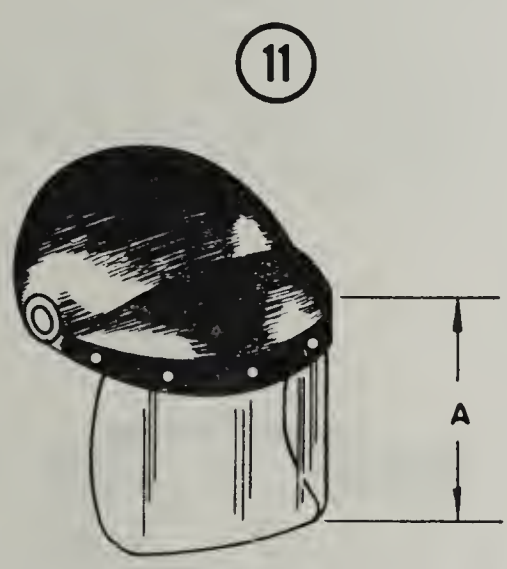

PLASTIC VISOR WITH FOREHEAD AND SEMISKULL GUARD

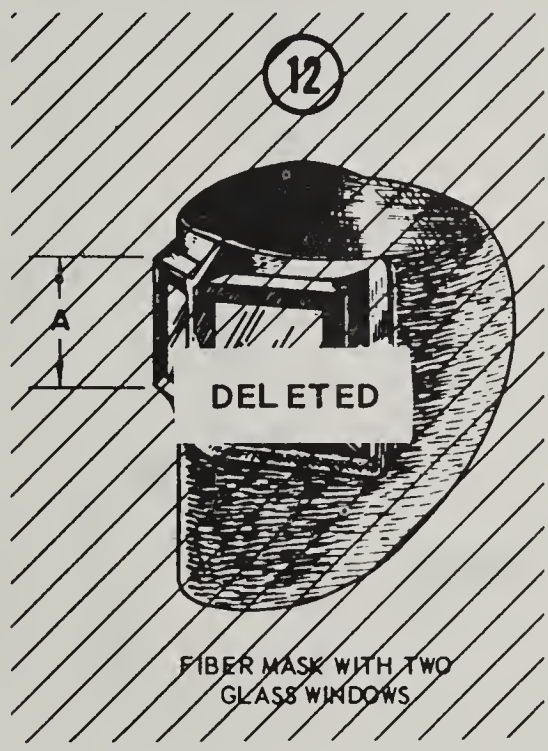

FIBER MASK WITH TWO GLASS WINDOWS

FIBER MASK WITH FILTER LENS

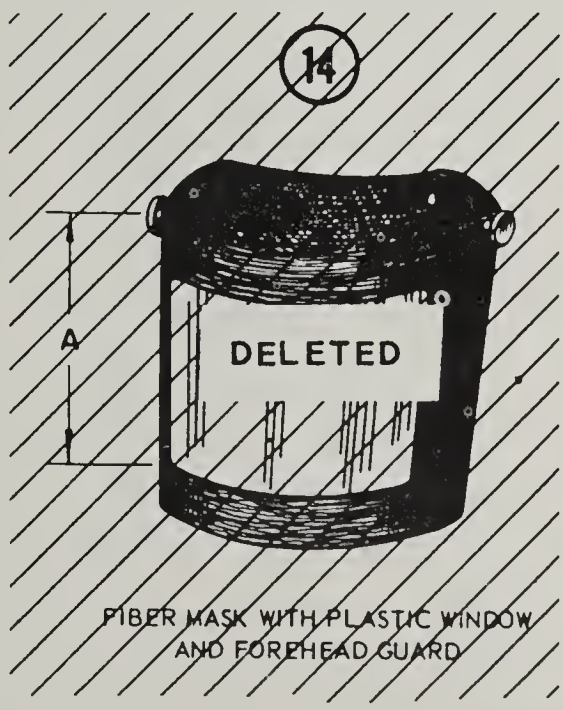

FIBER MASK WITH PLASTIC WINDOW AND FOREHEAD GUARD

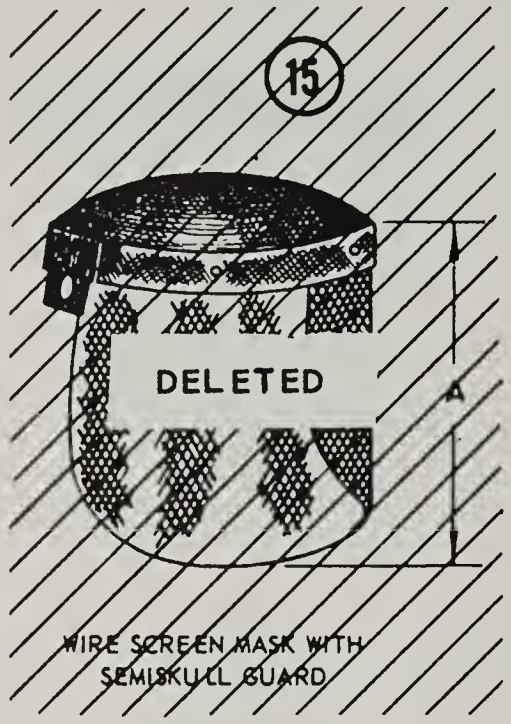
15
DELETED
A
WIRE SCREEN MASK WITH SEMISKULL GUARD

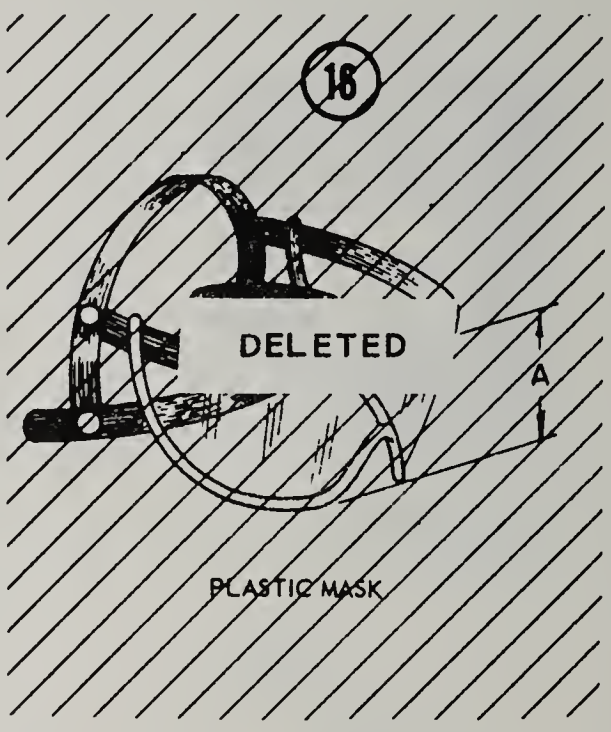
16
DELETED
A
PLASTIC MASK

17
DELETED
A
PLASTIC MASK

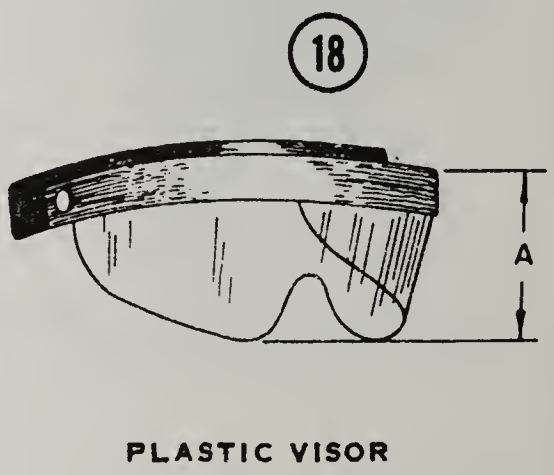
18
A
PLASTIC VISOR

Hand Held Welding Shields

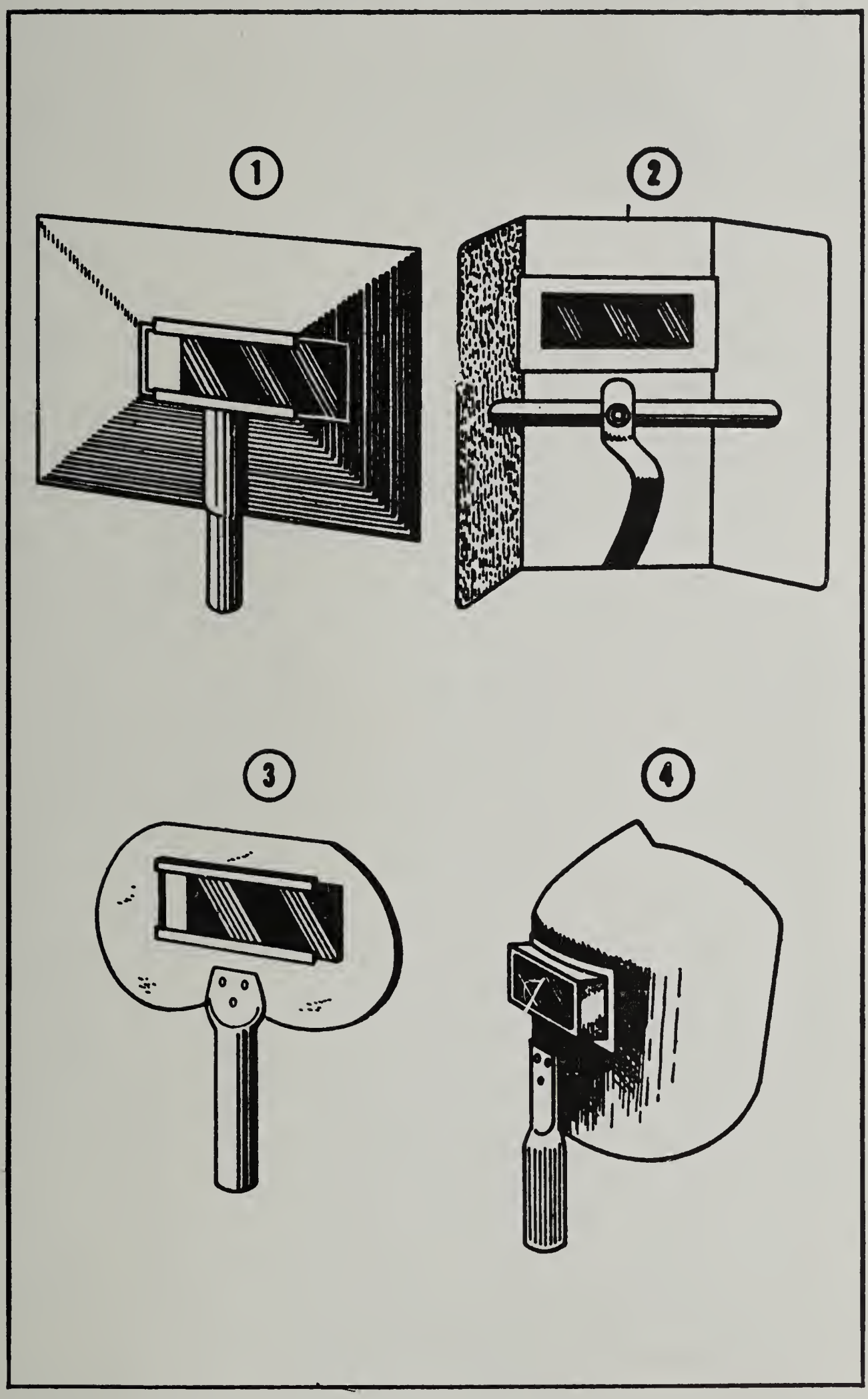

Ref Dwg Group 141	PART 3 Federal Item Identification Guides for Supply Cataloging

5

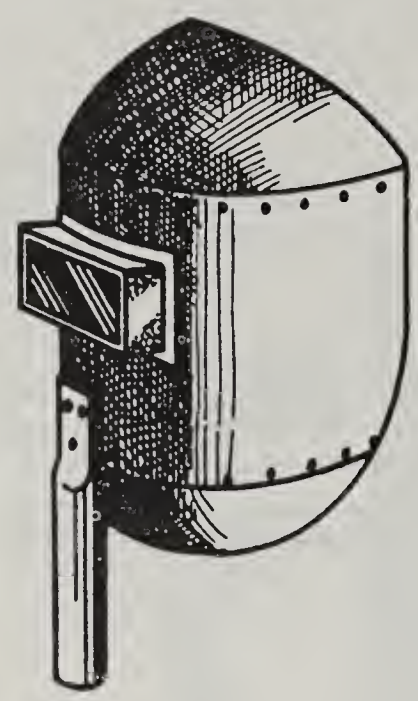

6

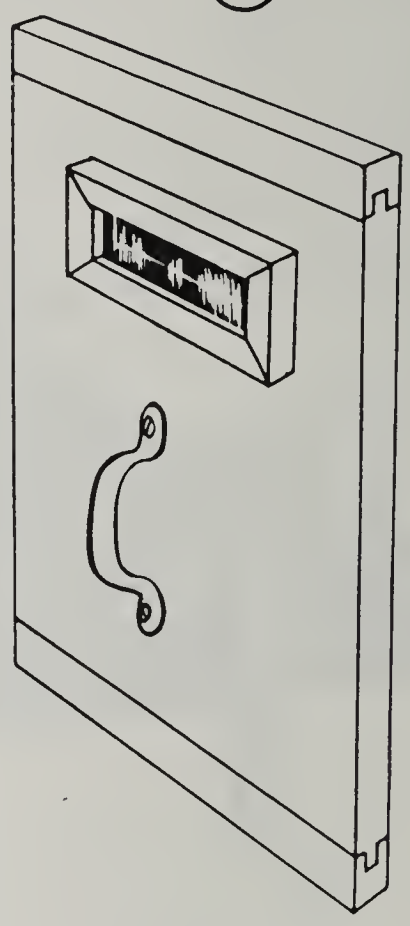

Fire Extinguisher Brackets

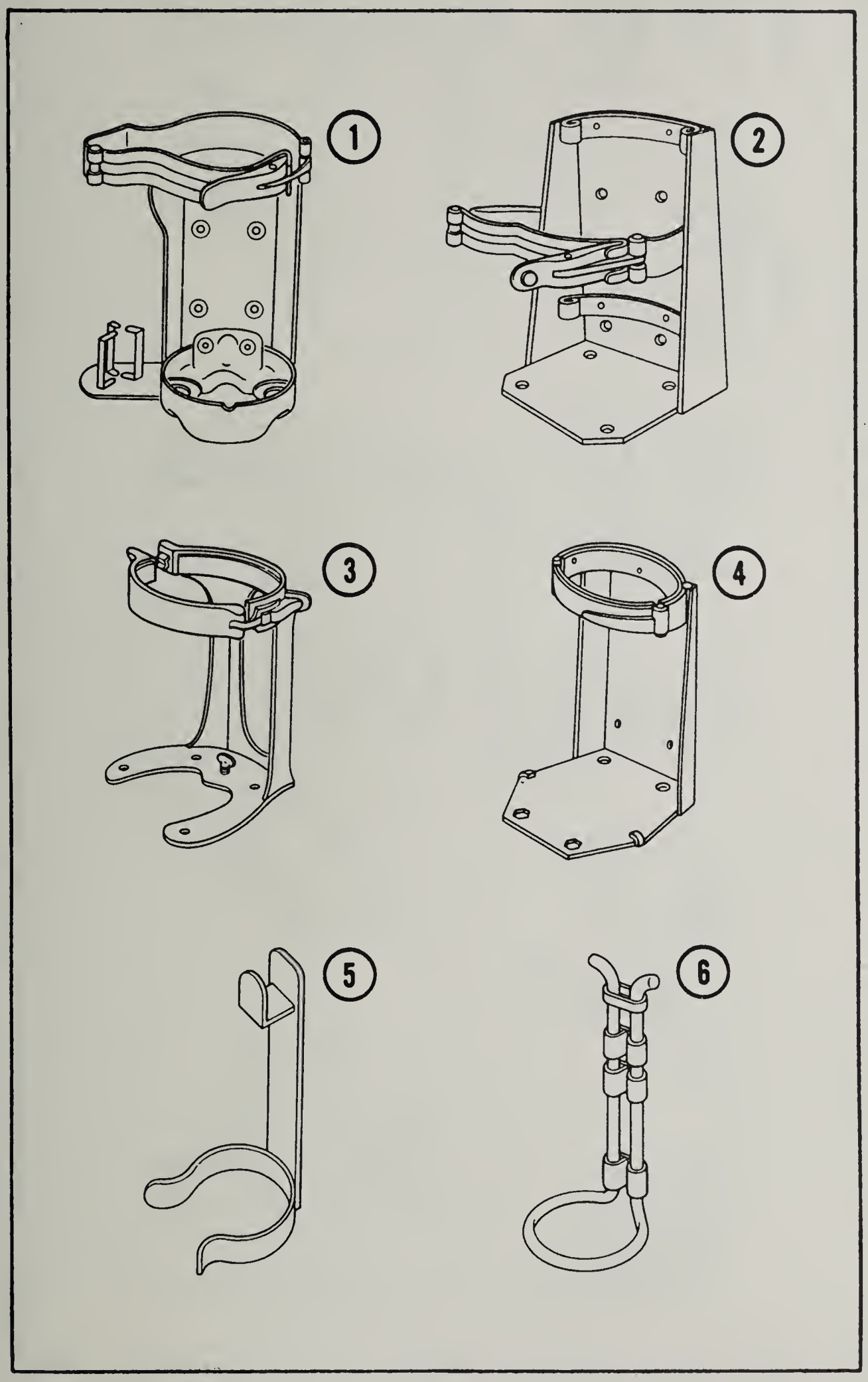

14 July 1961

Ref Dwg Group 149	PART 3 Federal Item Identification Guides for Supply Cataloging

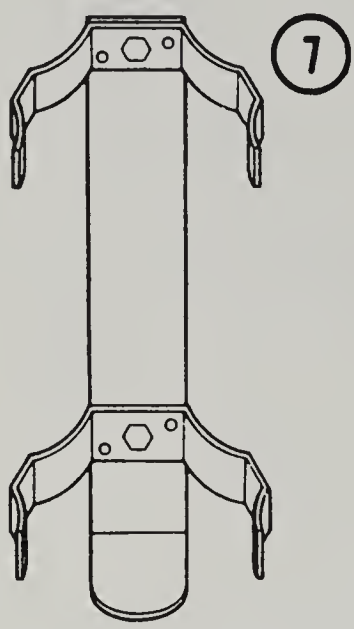

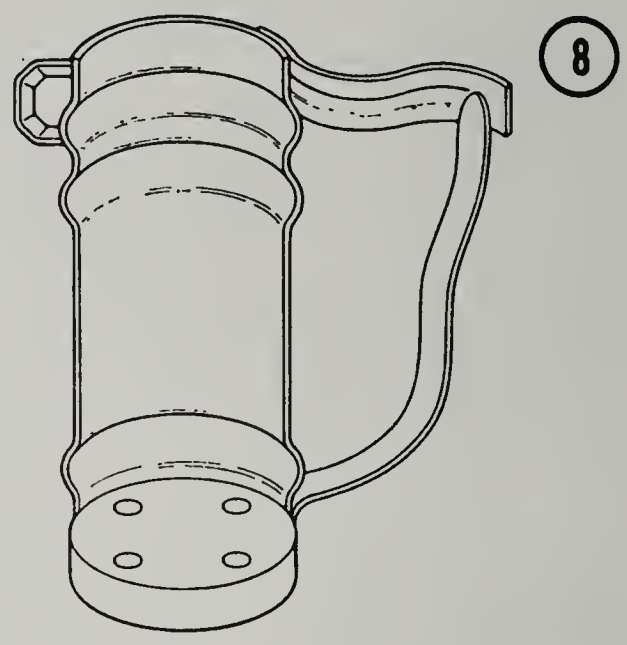

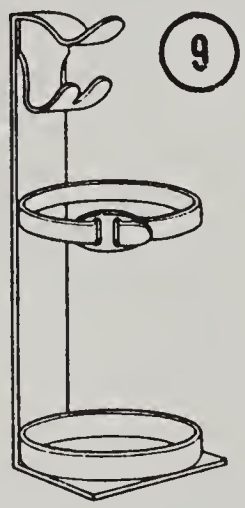

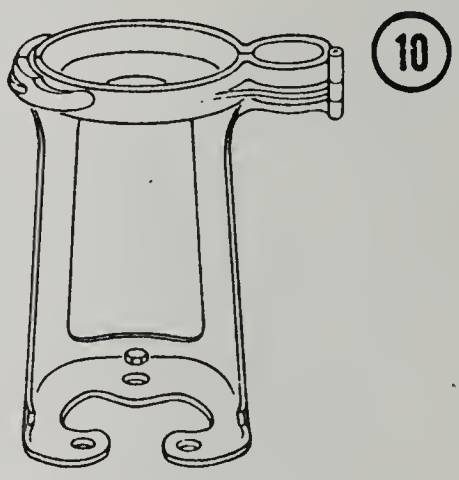

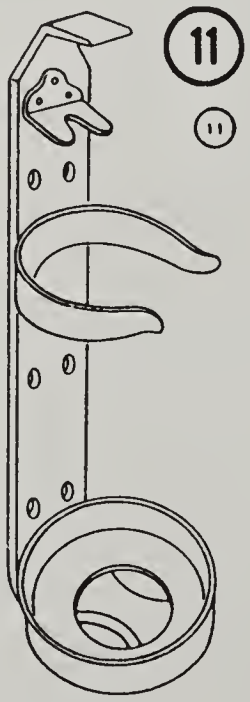

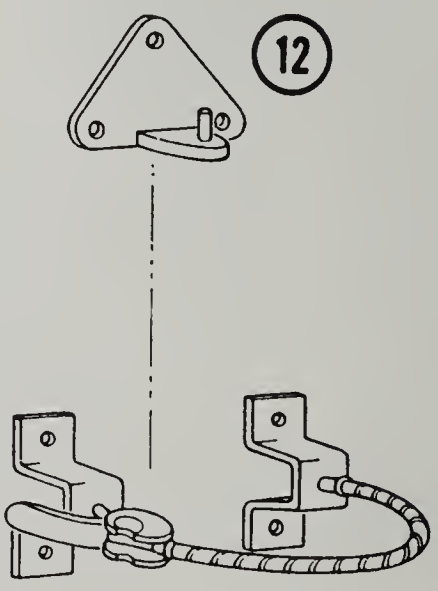

PART 3 Federal Item Identification Guides for Supply Cataloging	Ref Dwg Group 149

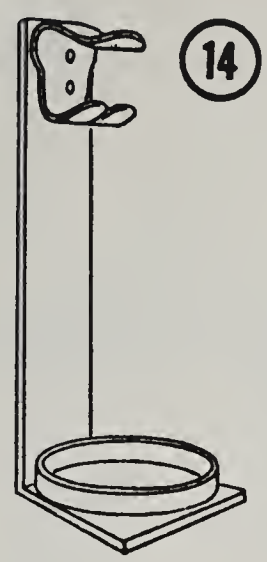

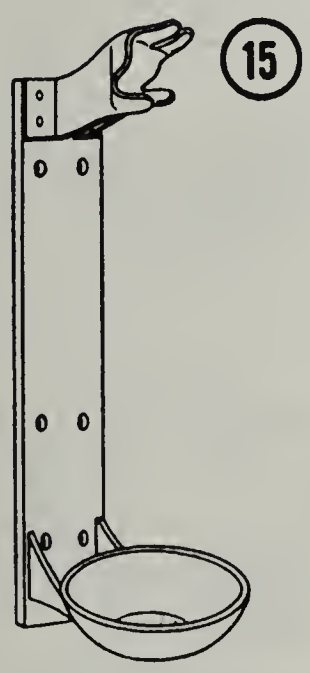

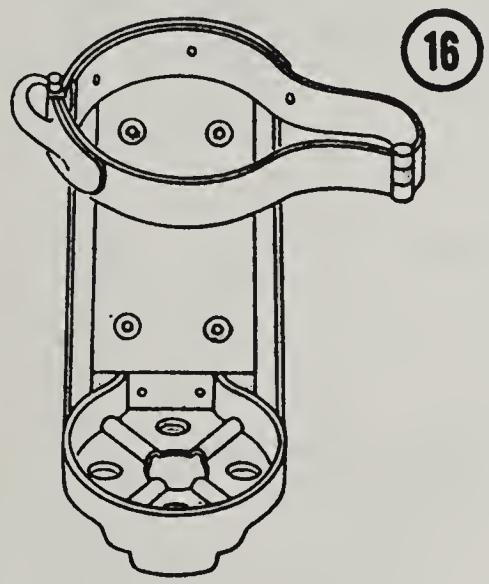

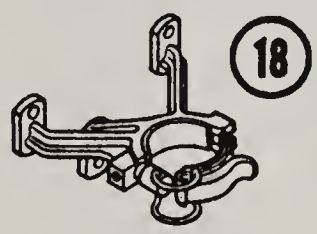

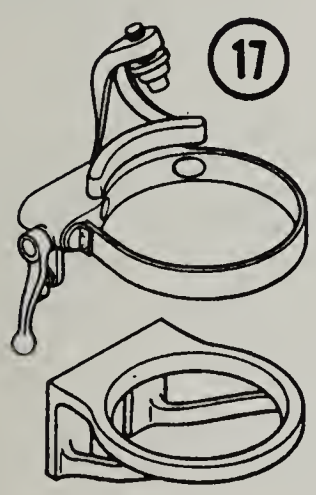

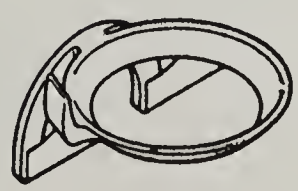

14 July 1961

Ref Dwg Group 149	PART 3 Federal Item Identification Guides for Supply Cataloging

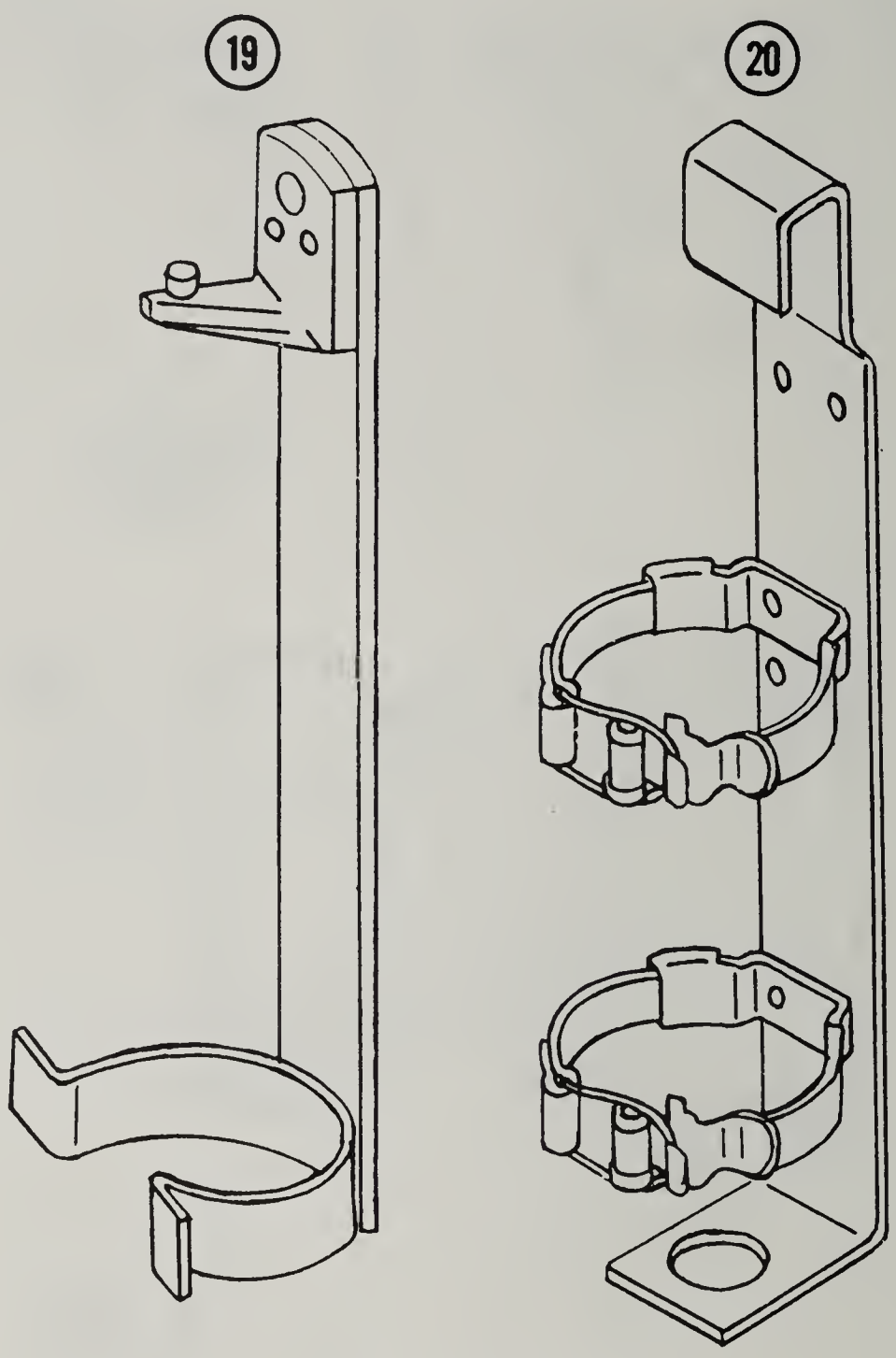

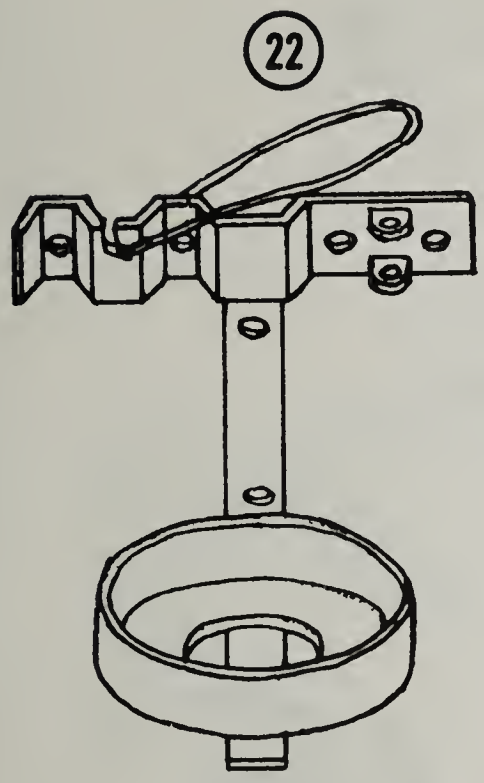
22

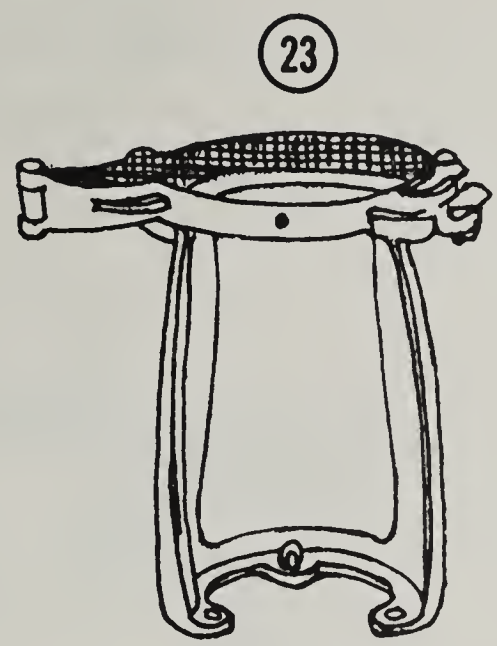
23

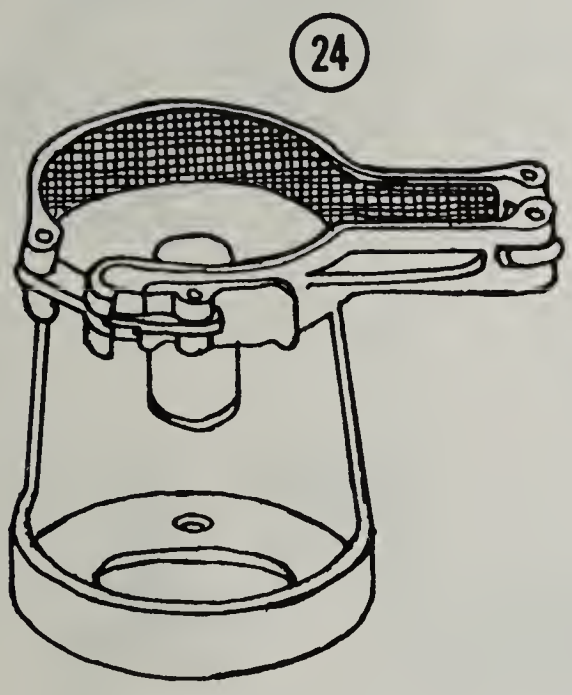
24

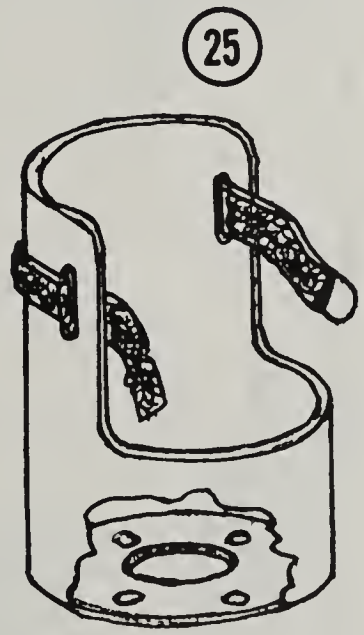
25

26

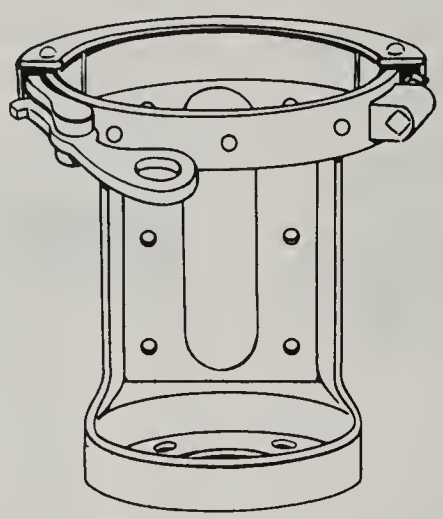

27

28

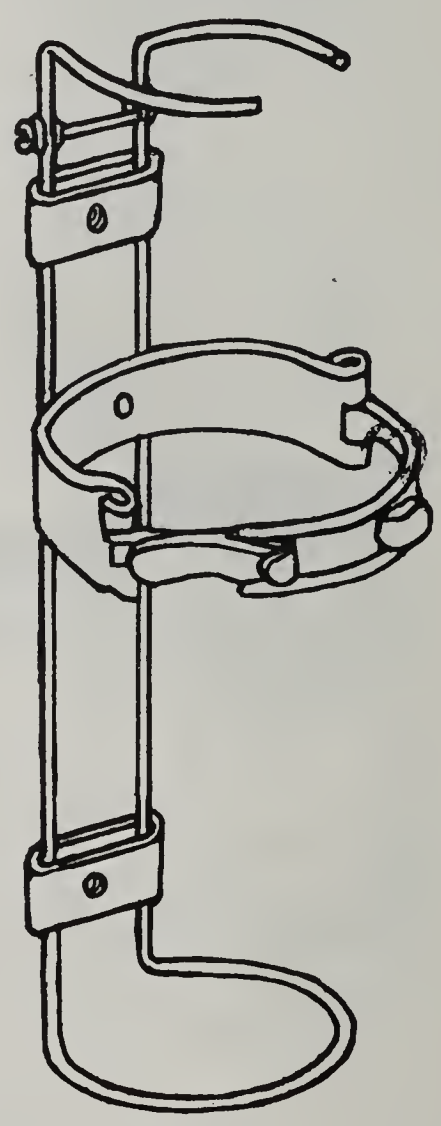

Fire Axe Holders

Section A — Blade Holders

1

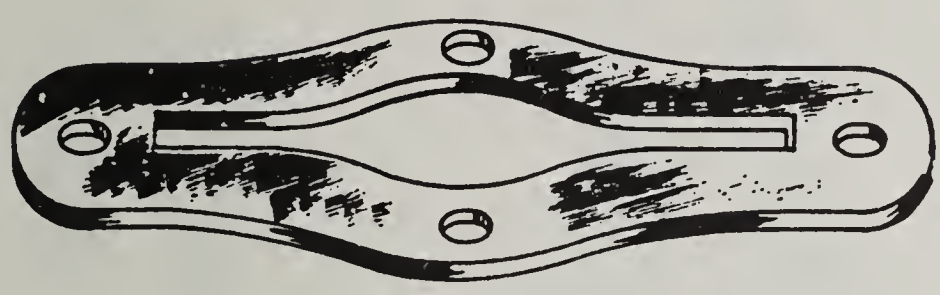

2

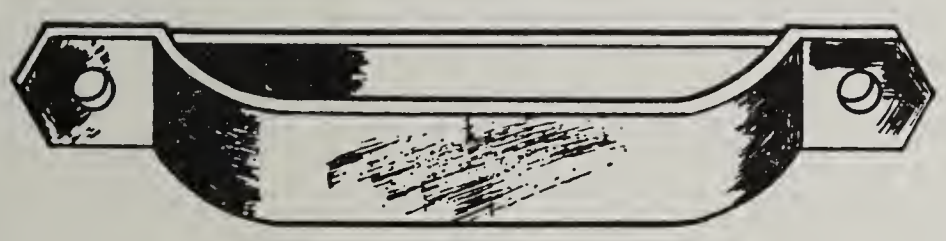

3

Section B — Handle Holders

1

2

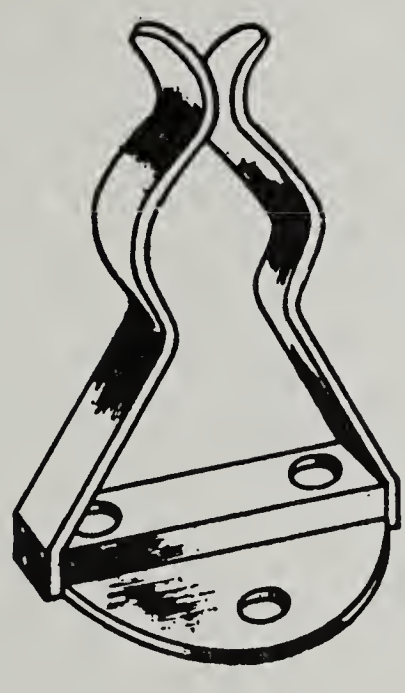

3

Valve Seat Refacing Pilots

Section A

NOTE.—The left hand end as depicted in the upper end of pilot.

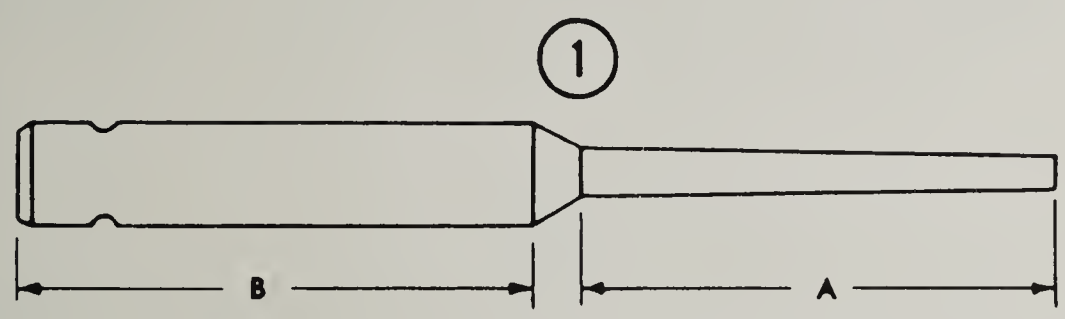

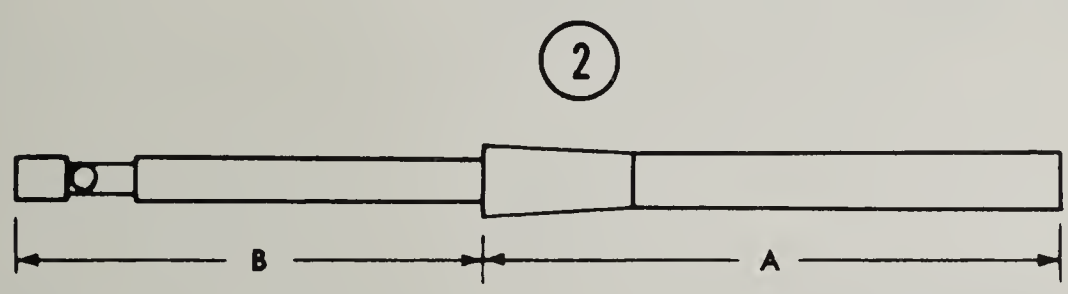

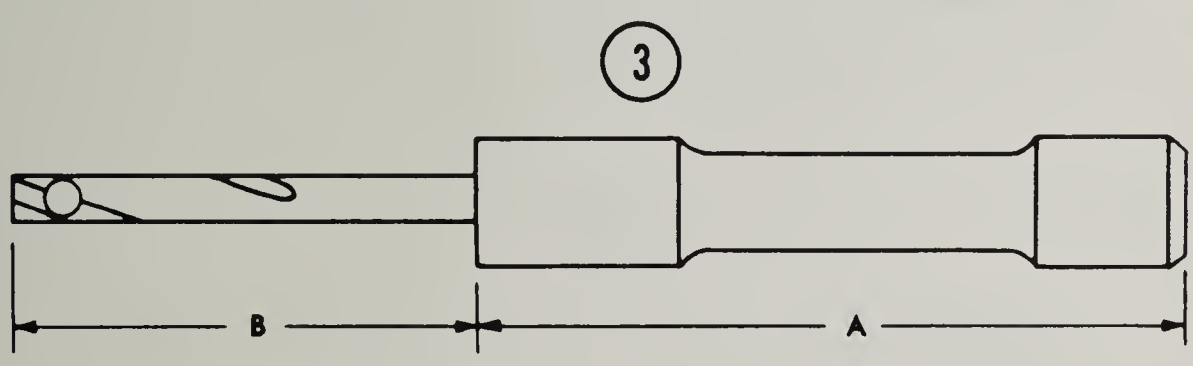

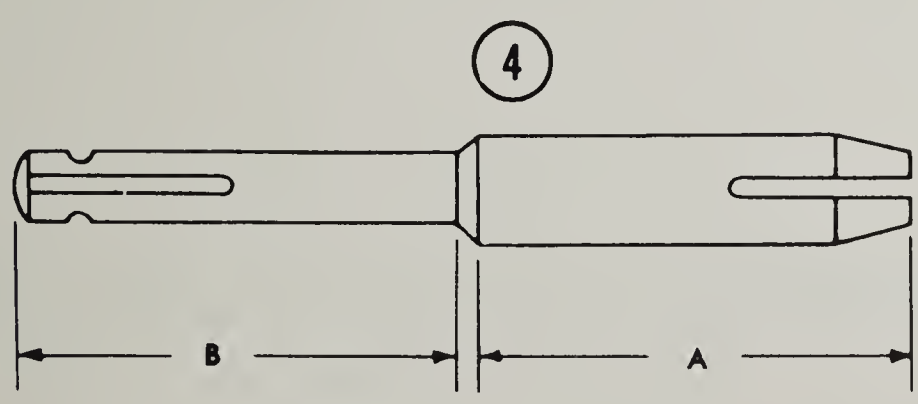

Section B

NOTE.—The left hand end as depicted in the upper end of pilot.

1

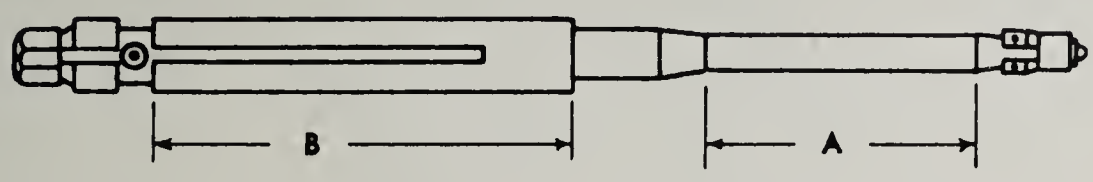

2

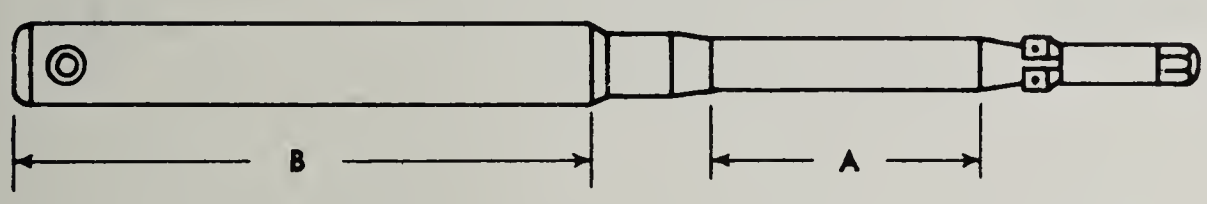

3

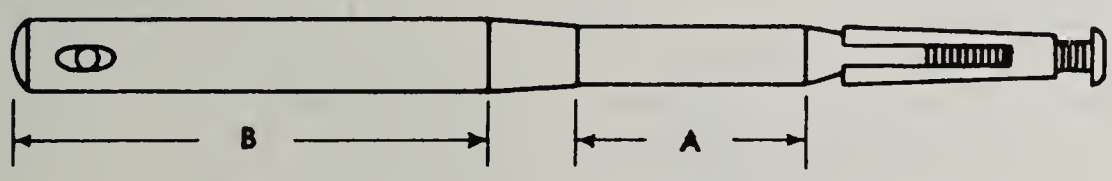

4

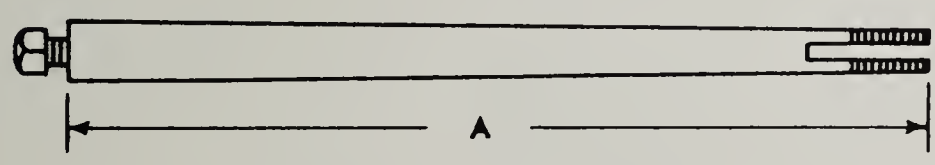

5

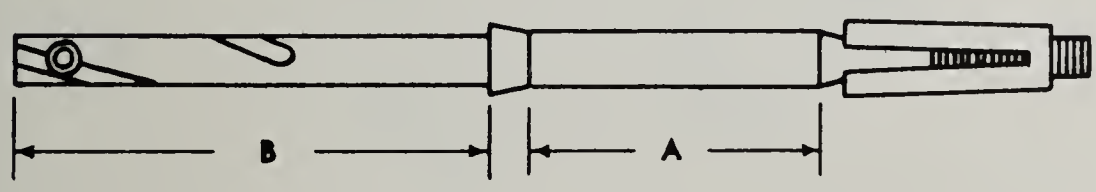

Section B

6

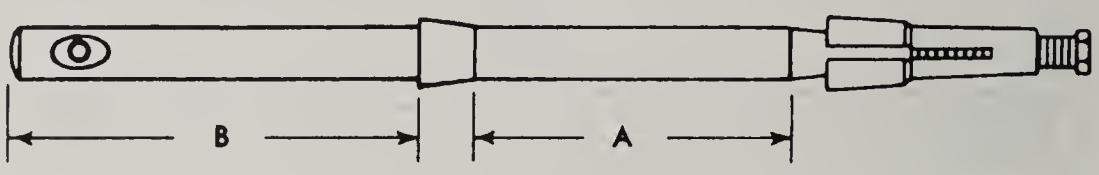

7

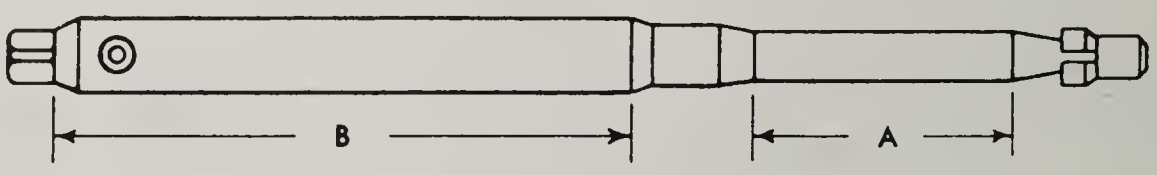

8

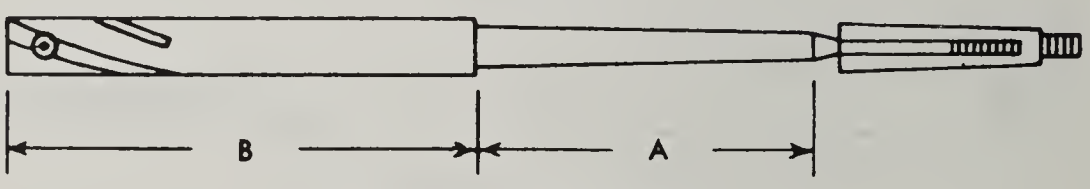

COUNTER BORED GUIDE TYPE

Pipeline Cleaning Elements

1

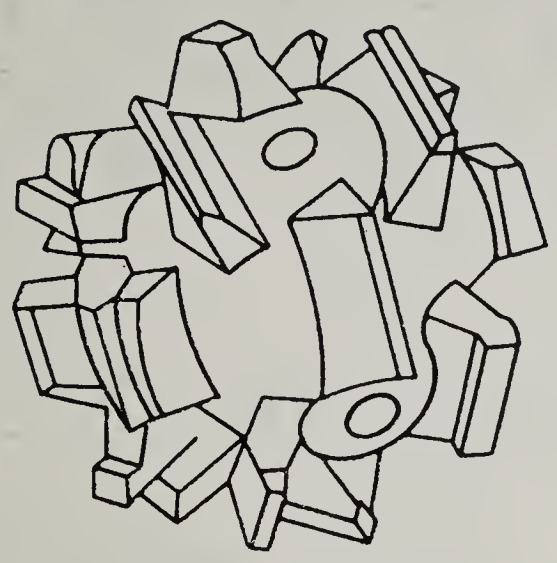

2

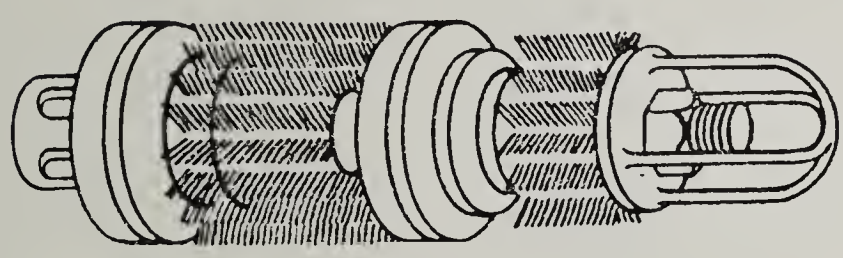

3

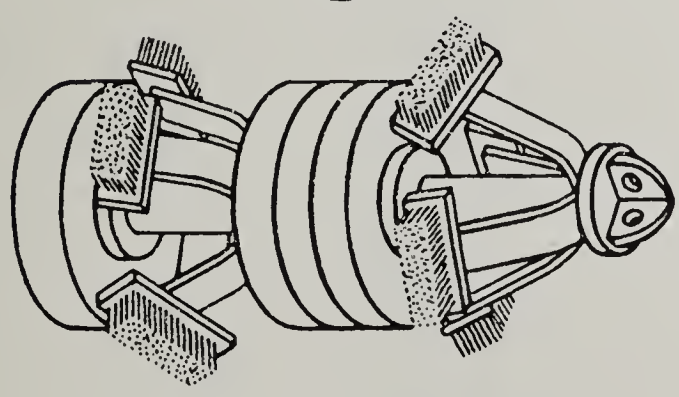

4

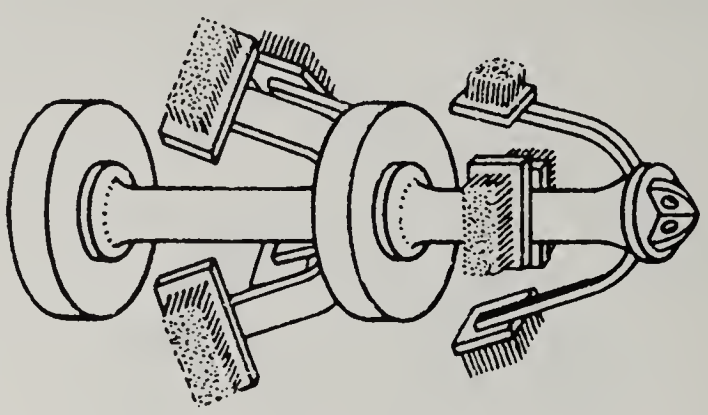

5

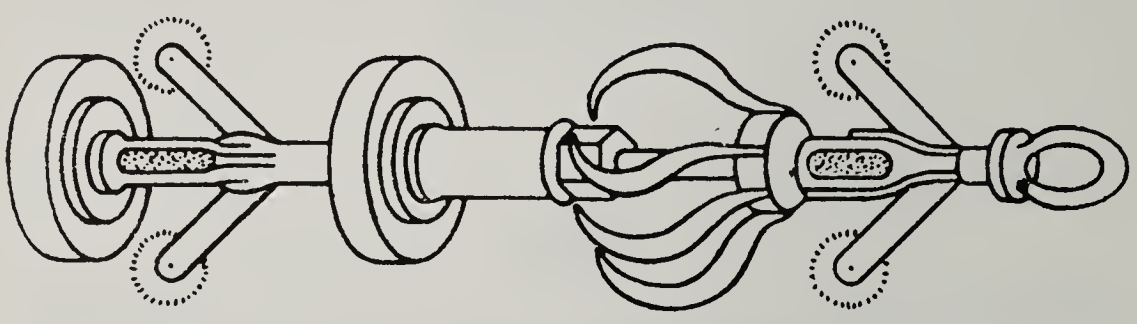

Protections Afforded by Filters and Chemical Cartridges

Section A—Filters

Hazards

chromic mists	Chromium mist
metal fumes	Fumes encountered in smelting, foundries, welding or lead fumes.
mists	Wet fog-like oil or water droplets containing toxic or lung damaging particles suspended in them.
nuisance dusts	Aluminum Cellulose Cement Charcoal Coal Flour Gypsum Iron Ore Limestone Wood
paint mists	**Paint particles encountered in spraying.**
pneumoconiosis dusts	Chrysoltile Flint Free Silica Quartz Sandstone Serpentine
toxic dusts	Antimony Arsenic Cadmium Chromium Lead Selenium Tellurium Thallium Vanadium

NOTE.—Select from left-hand column.

Section B—Chemical Cartridges

Hazards

inorganic vapors—1	Hydrochloric Acid
	Hydrogen Chloride
	Hydrogen Sulphide
	Nitric Acid
	Sulphuric Acid
	Sulphur Dioxide
inorganic vapors—2	Ammonia
inorganic vapors—3	Mercury
organic vapors—1	Acetone
	Alcohol
	Benzene
	Carbon Tetrachloride
	Ether
	Formaldehyde
	Gasoline
	Petroleum Distillates
	Toluene
organic vapors—2	Paint Sprays
	Varnish
organic vapors—3	Acetic Acid
	Bromine
	Chlorine
	Fluorine
	Phosphorus Pentachloride
	Phosphorus Trichloride
	Silicon Tetrachloride
	Stannic Chloride
	Sulphur Chloride
	Sulphur Dichloride

NOTE.—Select from left-hand column.

Wire Rope Socket Wedges

NOTES

1. Legend letter "R" indicates radii.

2. If tapered, list legend letter "D" as the thickness of the larger end and "D-1" as the thickness of the smaller end.

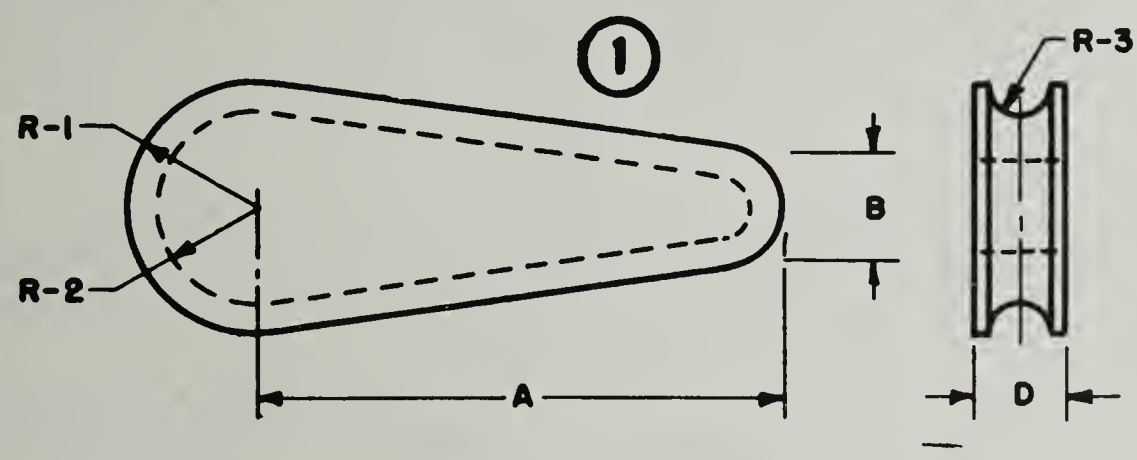

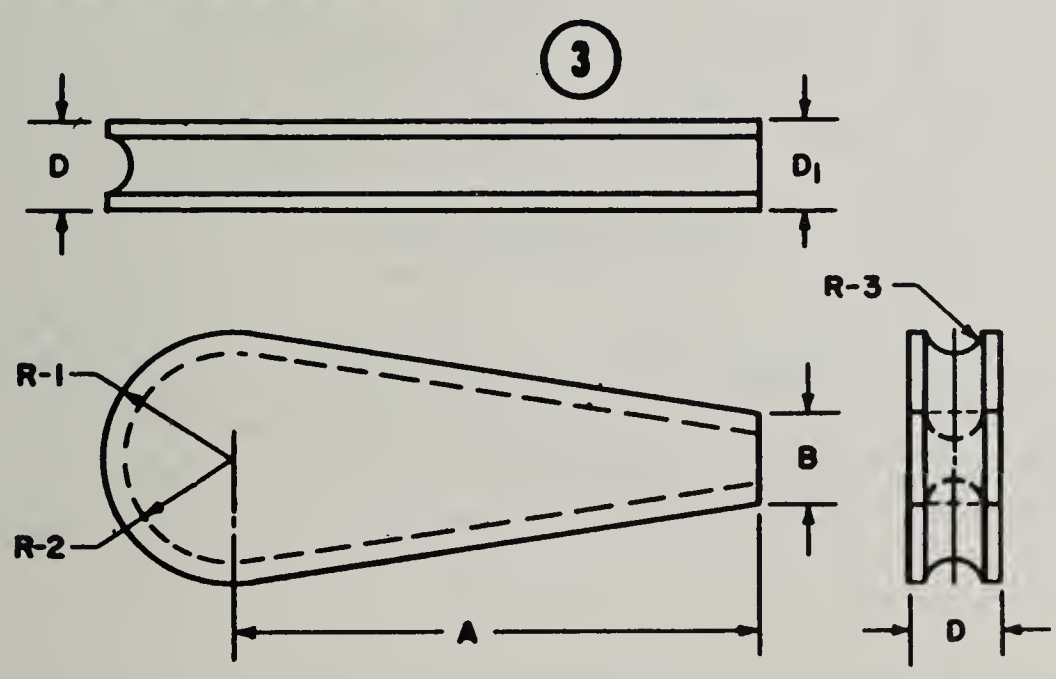

Ref Dwg Group 350	PART 3 Federal Item Identification Guides for Supply Cataloging

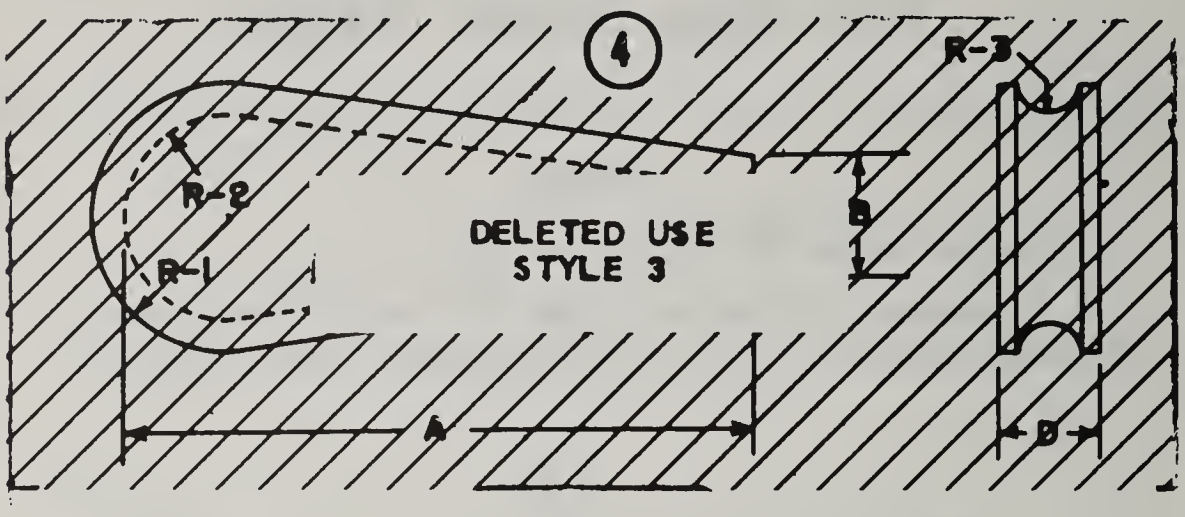

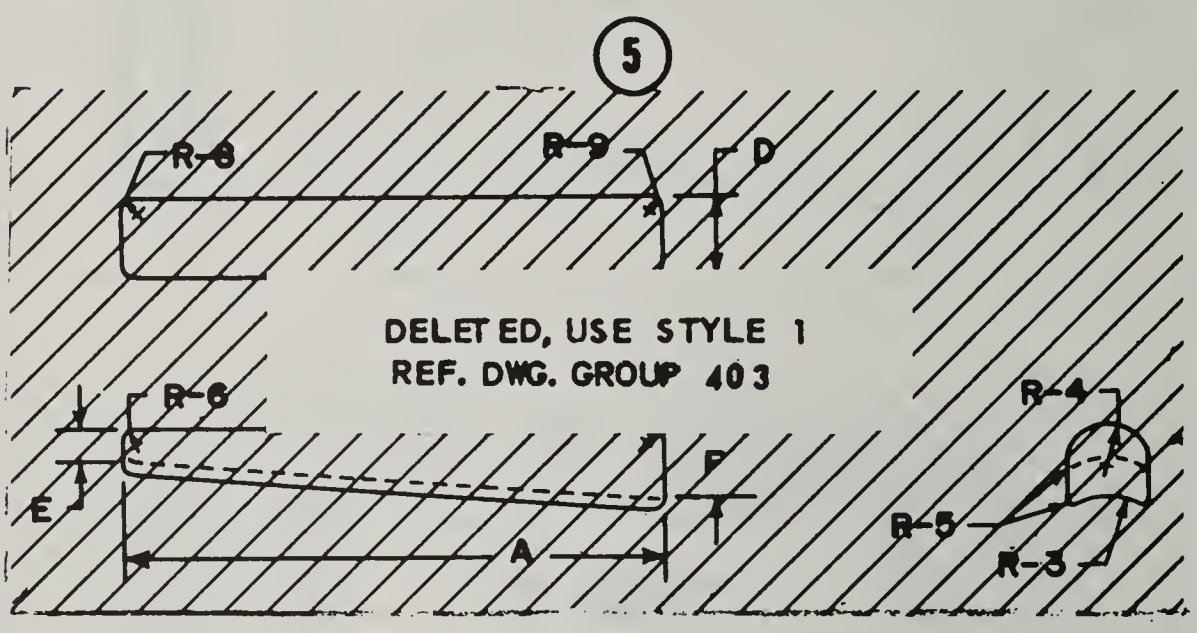

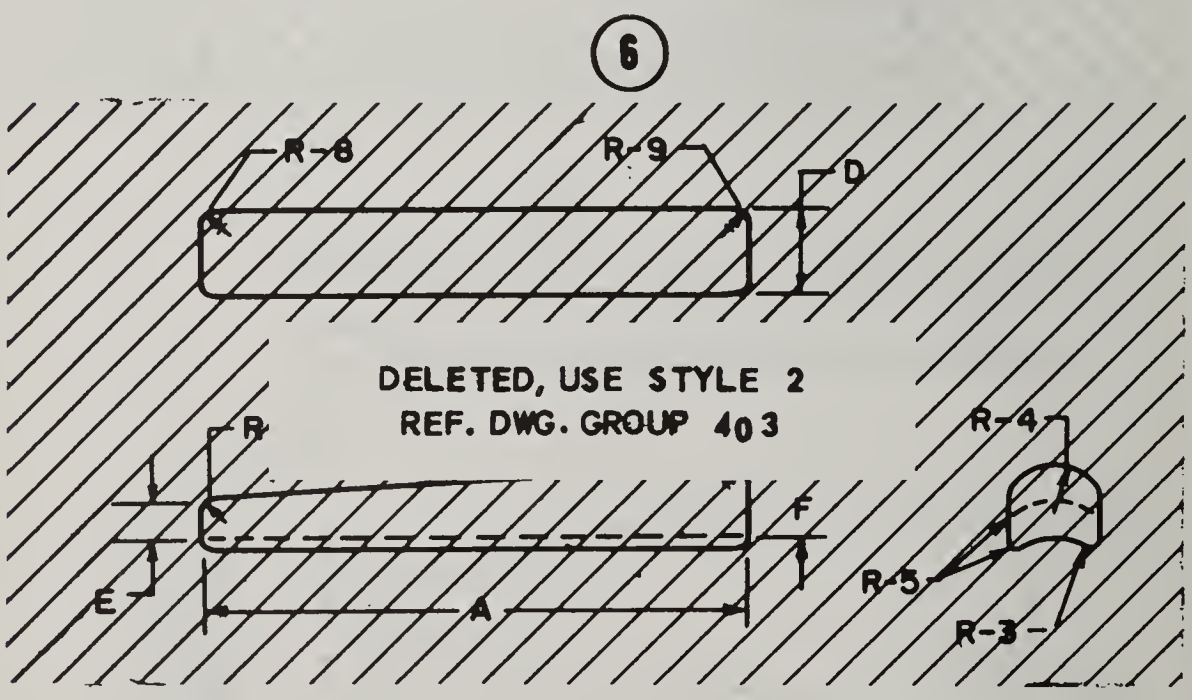

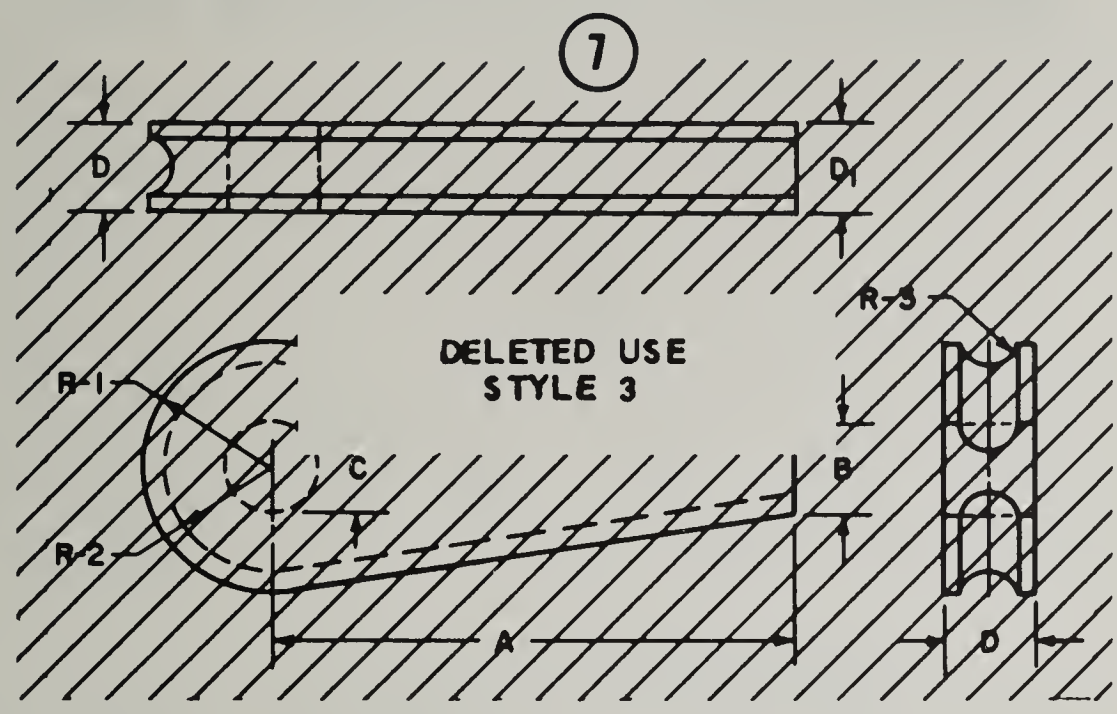
7
D
D1
R-3
DELETED USE
STYLE 3
R-1
C
B
R-2
A
D

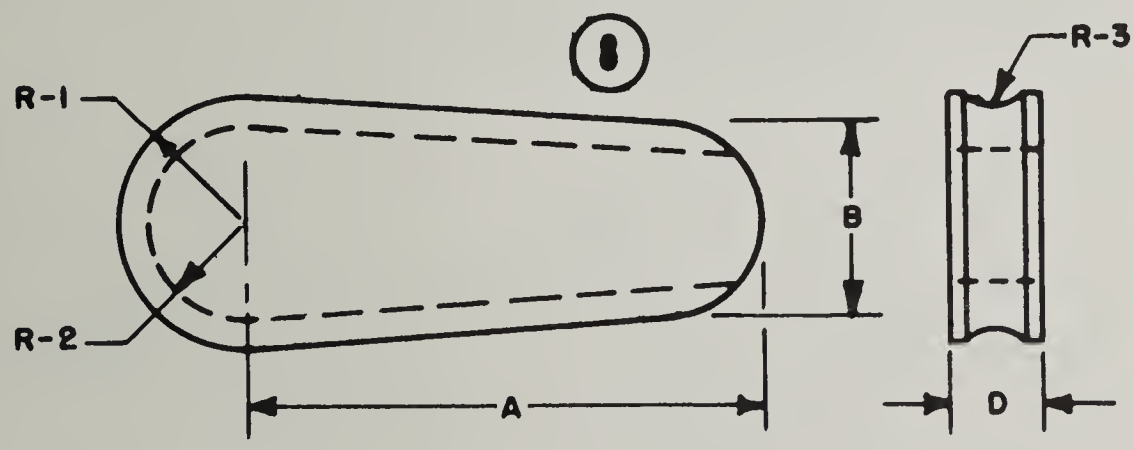
8
R-3
R-1
B
R-2
A
D

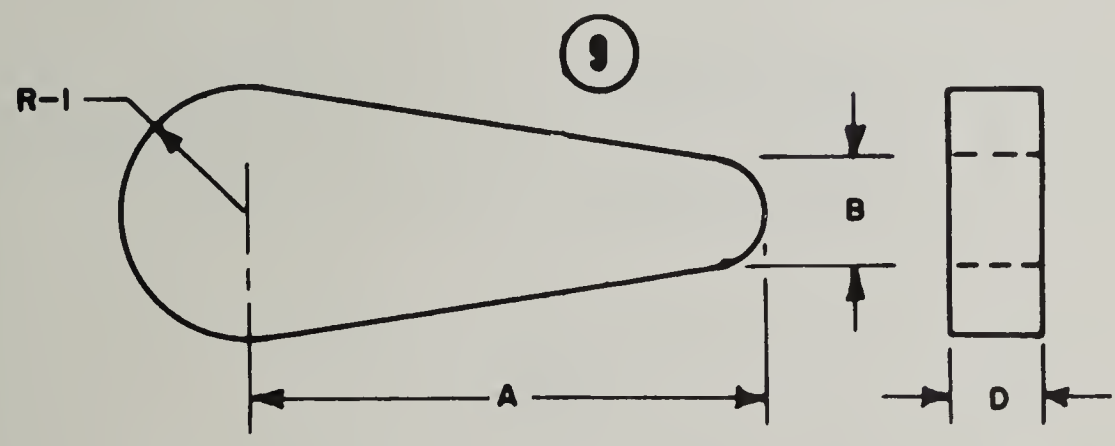
9
R-1
B
A
D

Quick-Disconnect Wire Rope Coupling

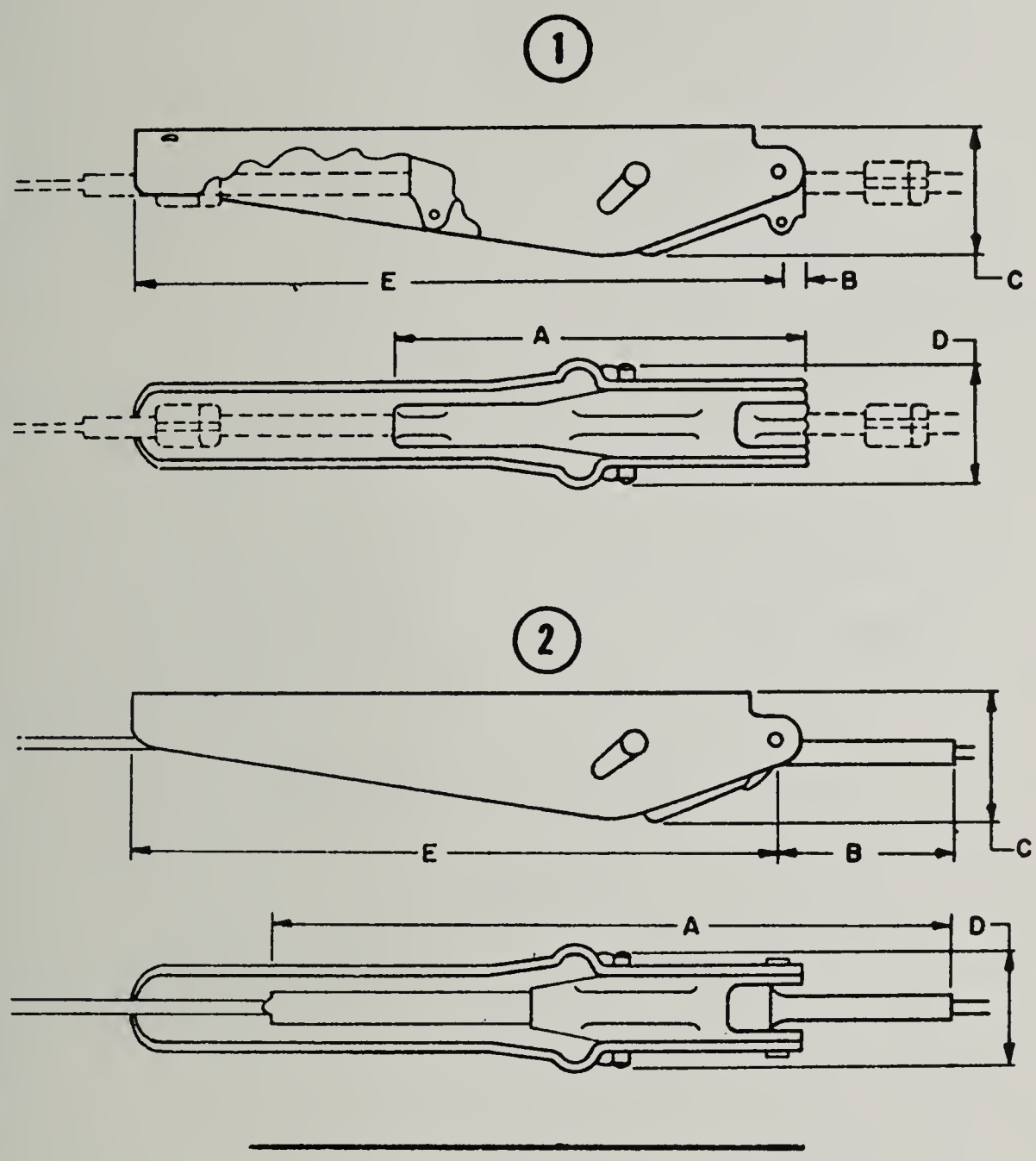

LEGEND

A – Length of body
B – Length of barrel
C – Over-all height of body
D – Over-all width of body
E – Length of handle

Adapters for Spark Plug Cleaners

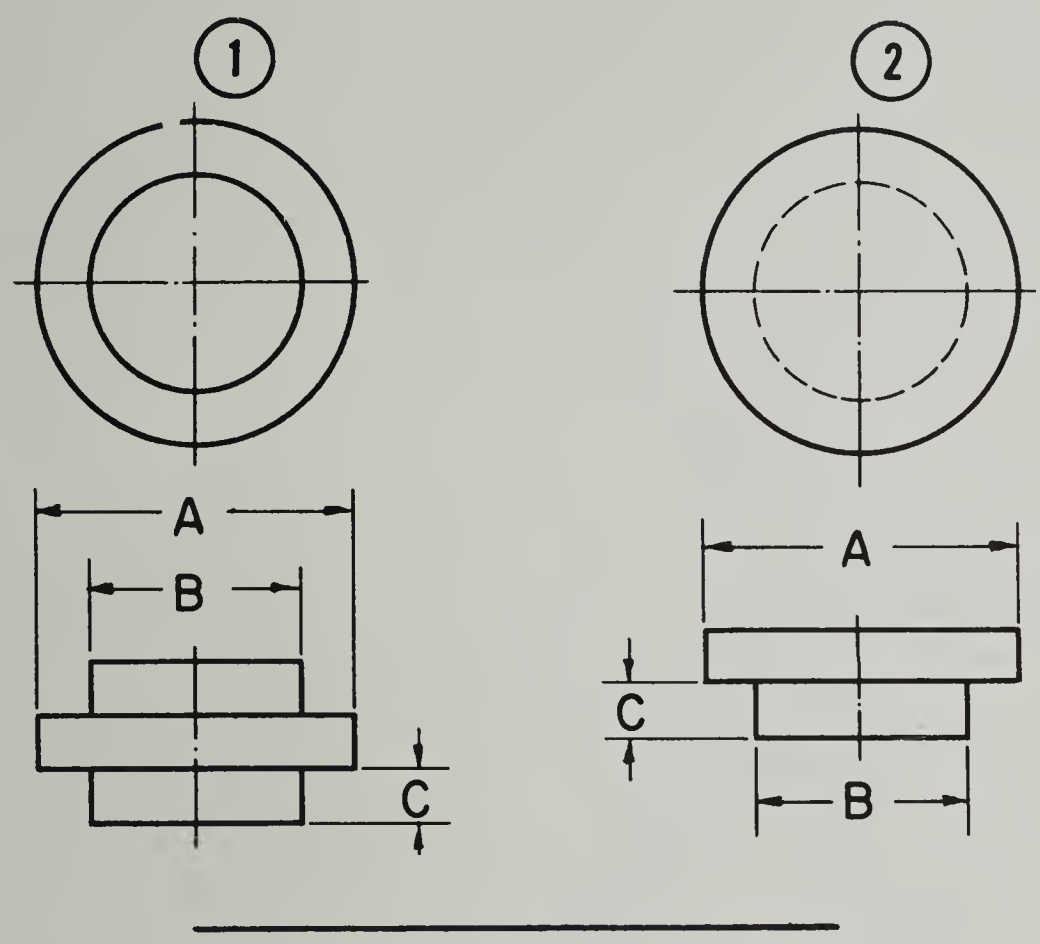

LEGEND

A—Diameter of shoulder
B—Diameter of body
C—Height of body

Breechblock Holding Tools

1. Styles transferred to FIIG T275.

2. Master retained at DLSC for NATO use only.

CANCELED

28 May 1971

Artillery Cartridge Remover(s)

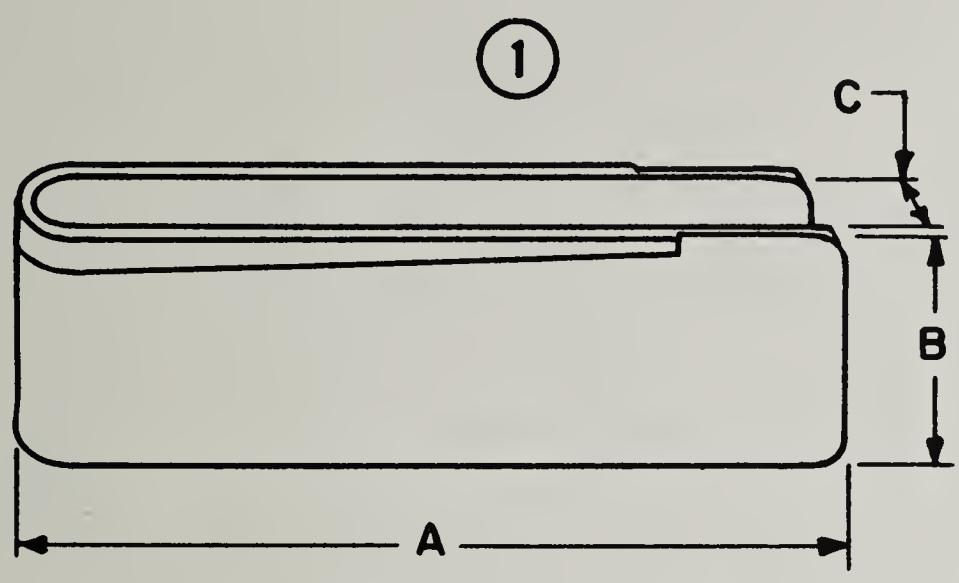

LEGEND

A—Length
B—Width
C—Width between faces

Equilibrator Cylinder Wrench Guide(s)

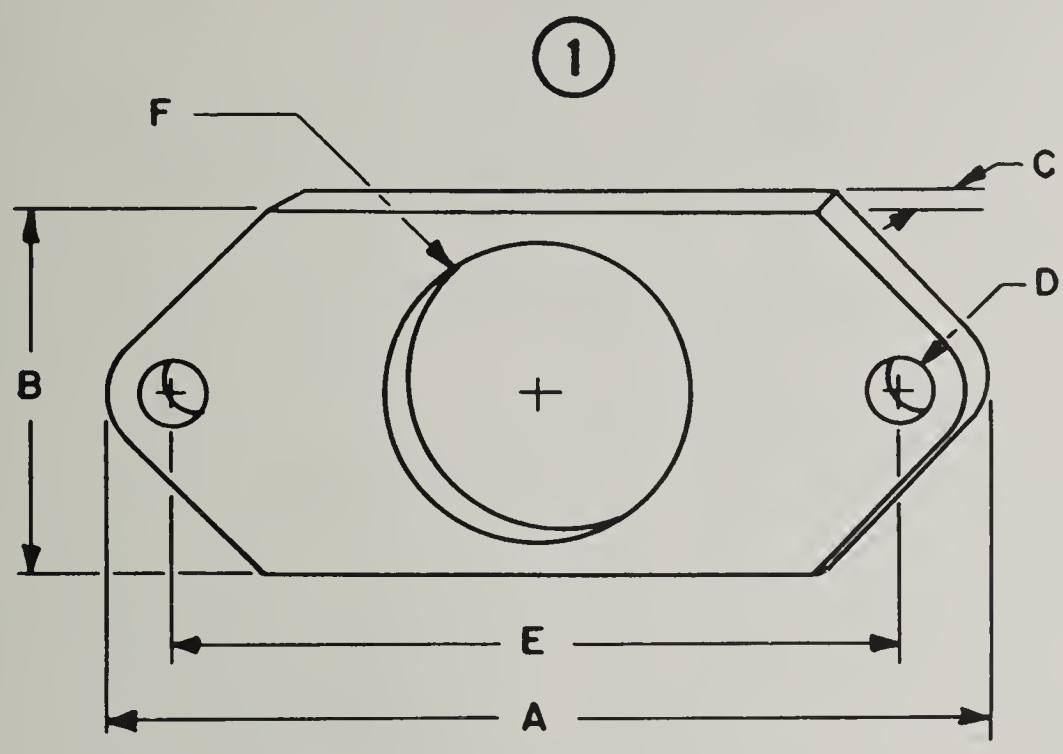

LEGEND

A—Over-all length
B—Width
C—Thickness
D—Number and diameter of mounting holes
E—Distance between mounting hole centers
F—Diameter of wrenching hole

Equilibrator Piston Rod Lock(s)

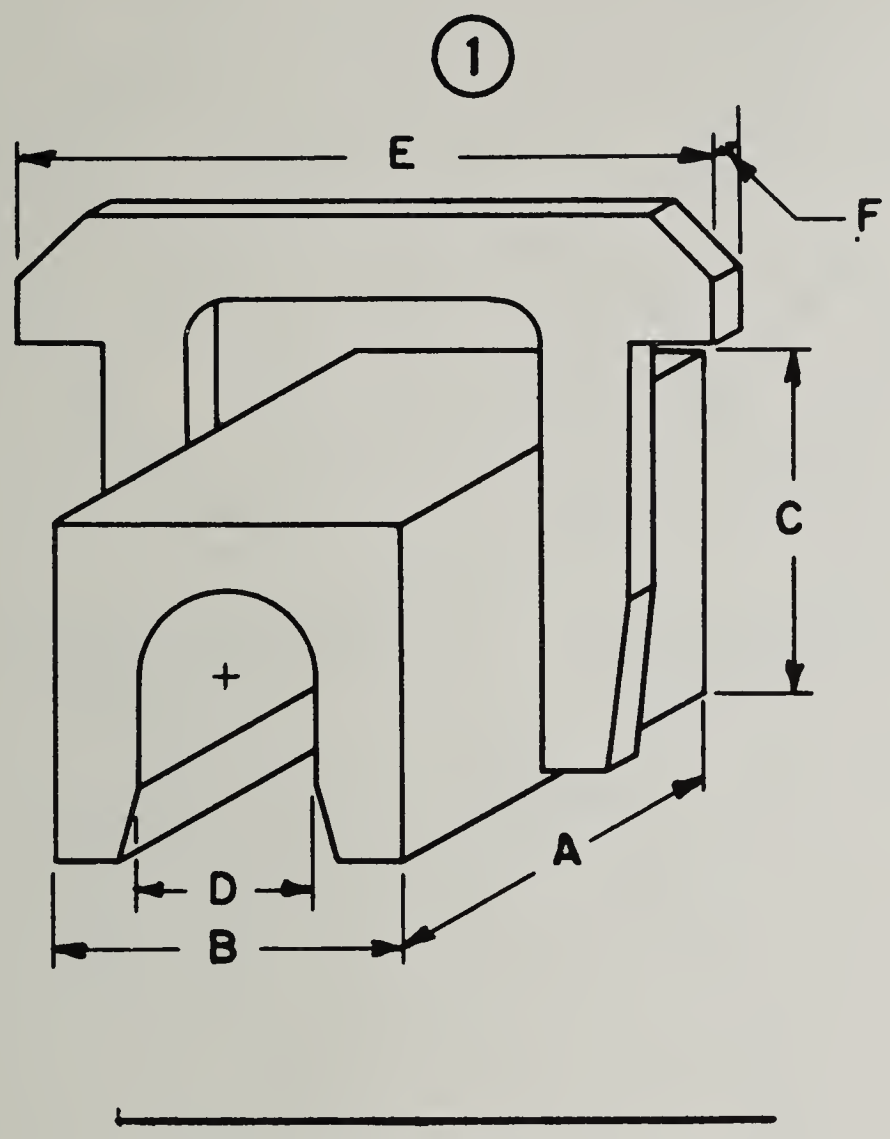

LEGEND

A—Length
B—Width
C—Height
D—Width of groove
E—Length of handle
F—Width of handle

Borescope Tube Supports

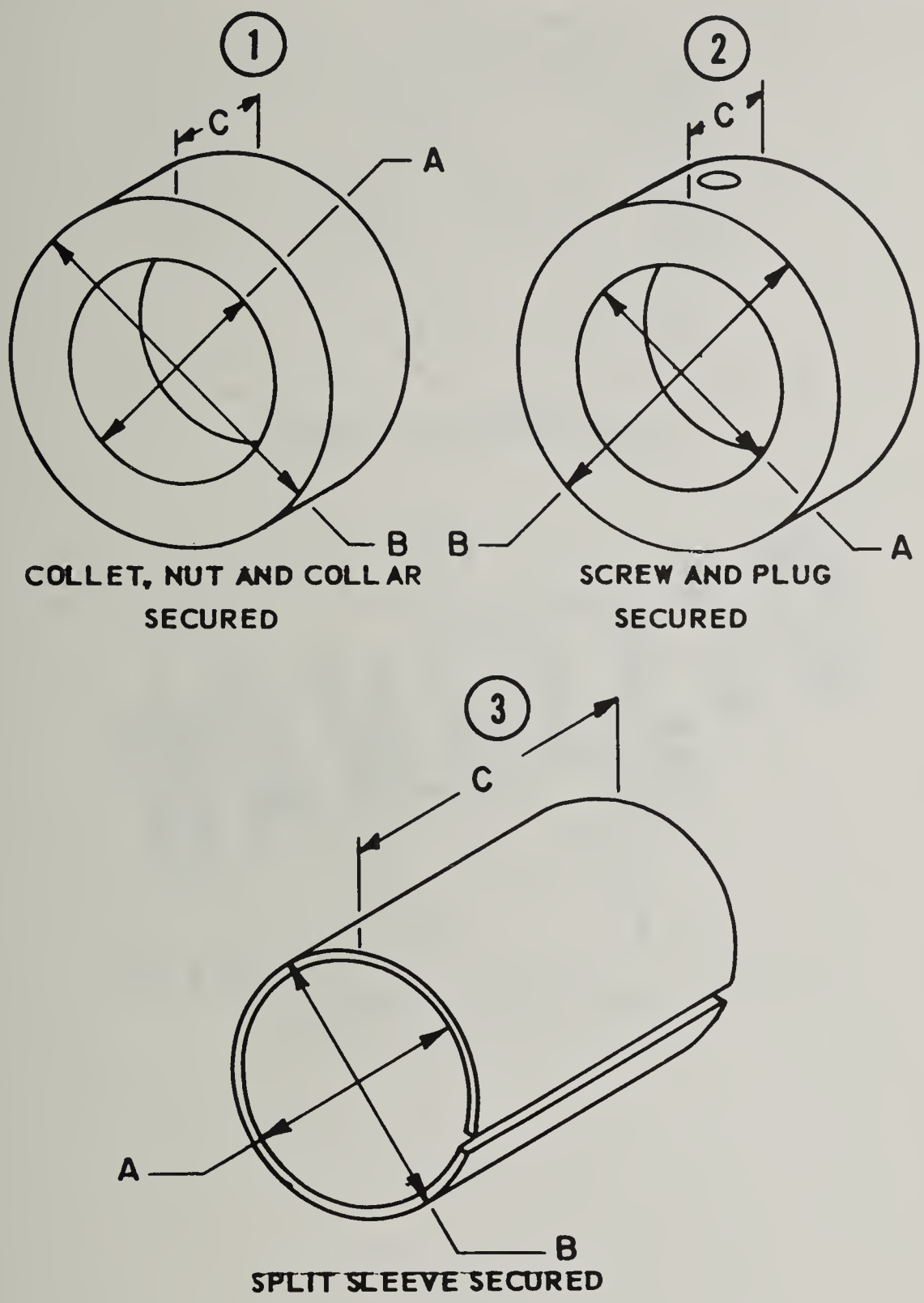

LEGEND

A—Inside diameter
B—Outside diameter
C—Thickness

4

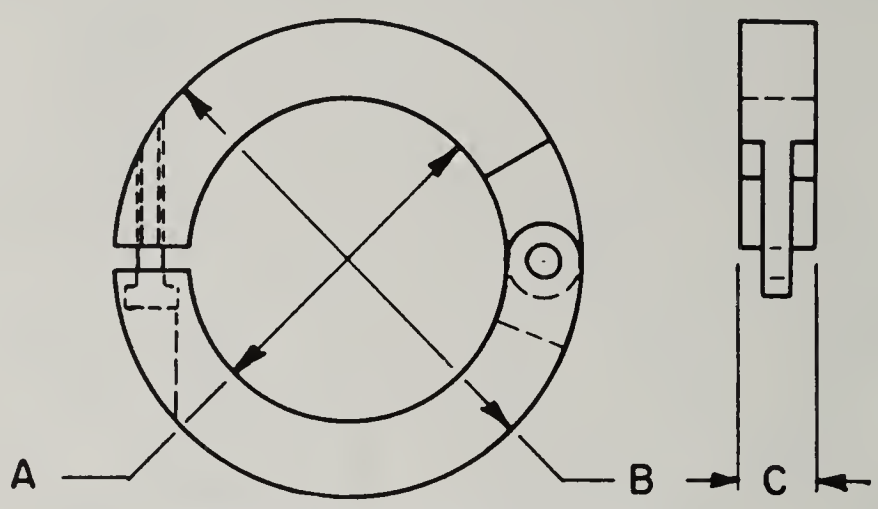

HINGE AND SCREW SECURED

5

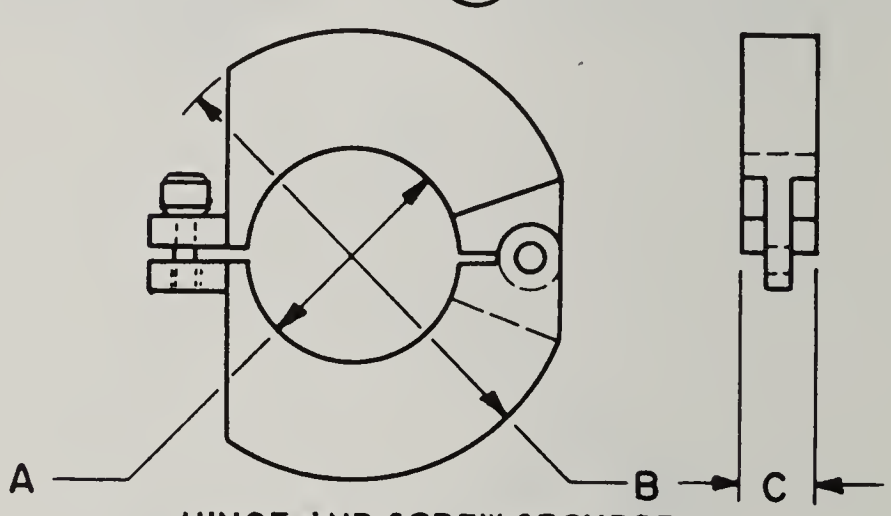

HINGE AND SCREW SECURED

Gun Barrel Reflectors

1. Styles transferred to FIIG T275.

2. Master retained at DLSC for NATO use only.

CANCELED

Wire Rope Drum Clamp Wedges

Note.—Legend letter "R" indicates radii.

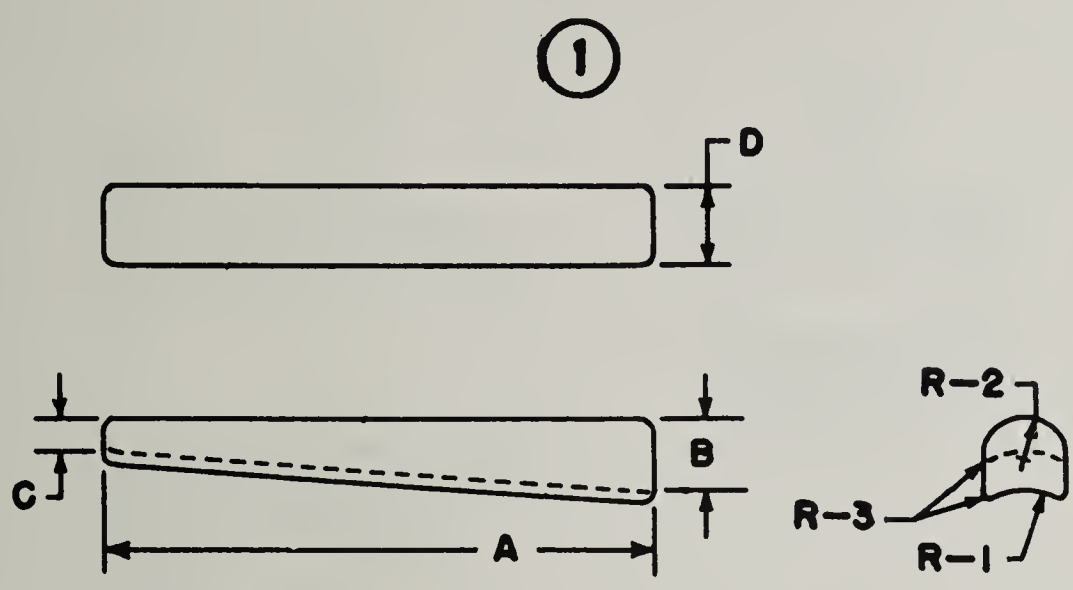

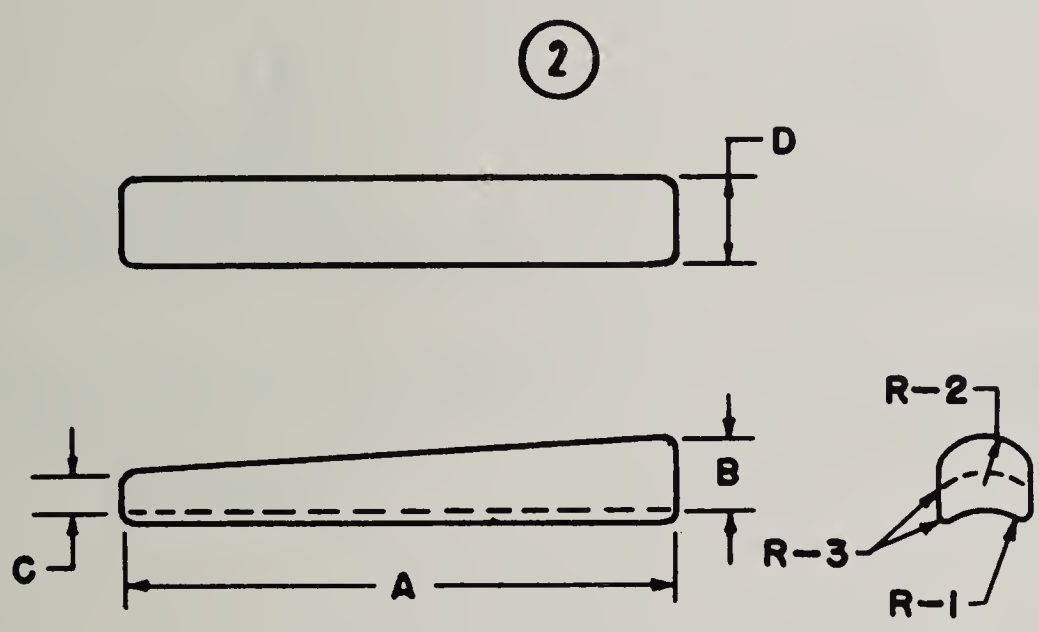

Recoil Mechanism–Equilibrator Charging Regulators and Adapter End Connections

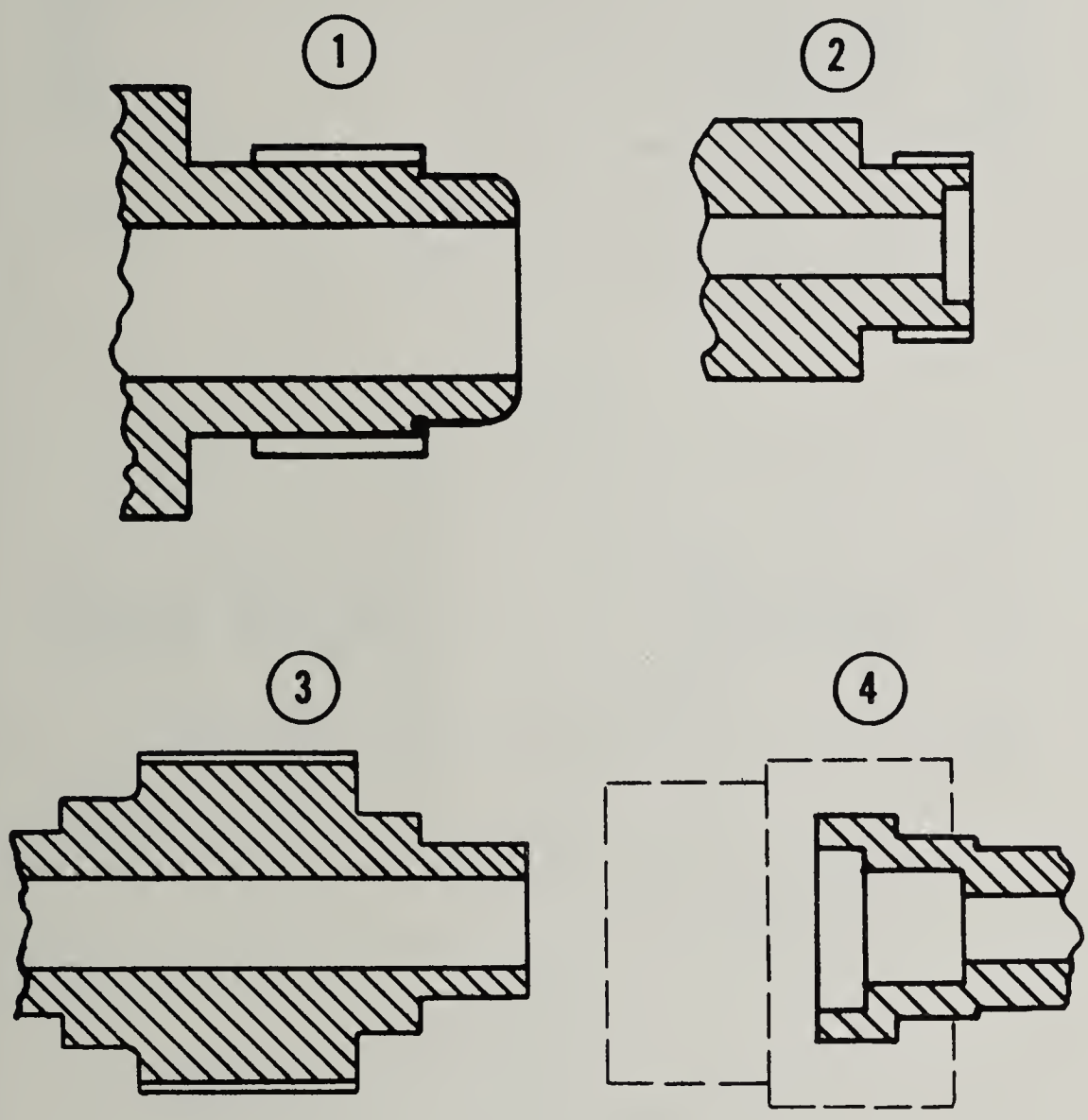

Gun Recoil Spring Compressors

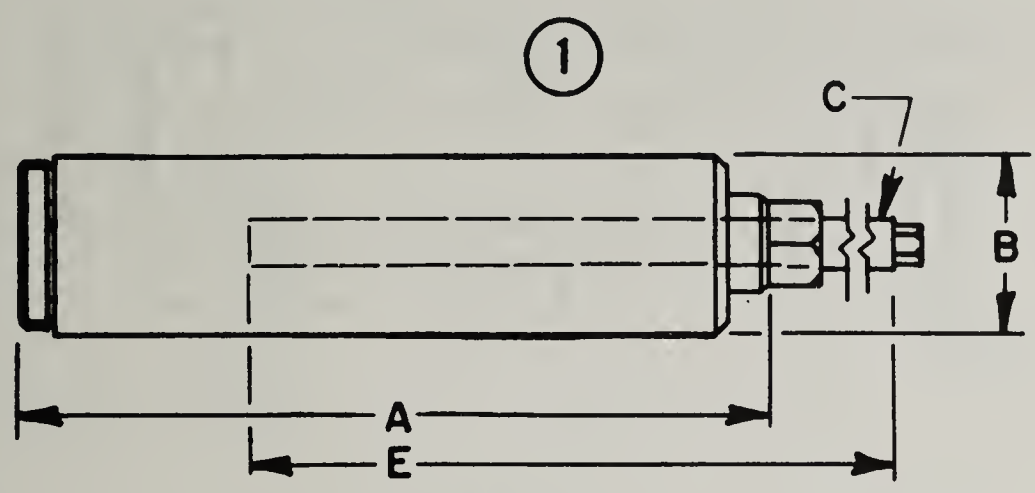

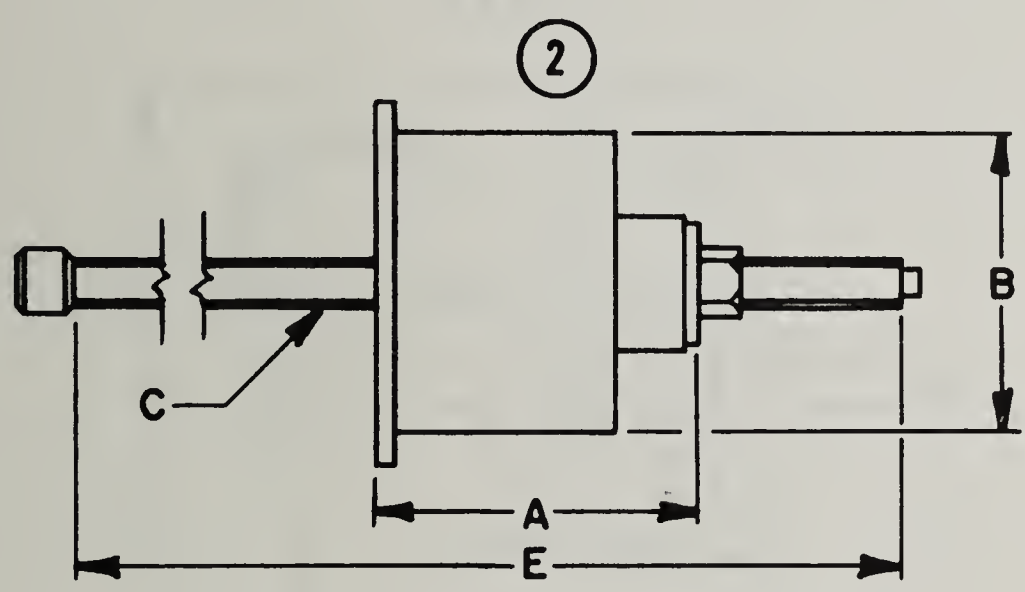

LEGEND

A—Length of tube (or fixture)
B—Outside diameter (or width) of tube (or fixture)
C—Thread designation (see note)
D—Thread designation of secondary screw (see note)
E—Thread length
F—Thread length of secondary screw

NOTE

Reply by furnishing the thread data in tabular form, e.g.,

a. Thread size (e.g., ⅞ in. 9 thd. size)
b. Thread series (e.g., NC; NF; N)
c. Class of fit; if thread not classified by fit, give minimum and maximum pitch diameters, showing minimum first (e.g., class 3 fit)

Ref Dwg Group 425	PART 3 Federal Item Identification Guides for Supply Cataloging

3

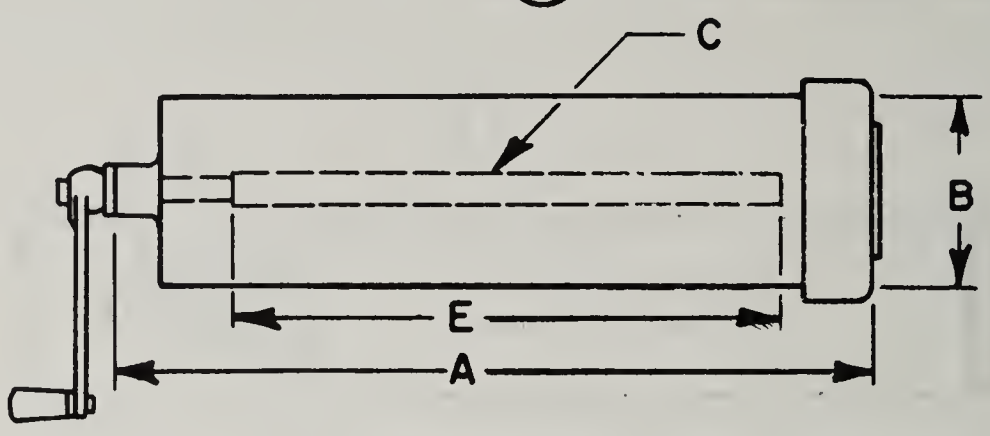

4

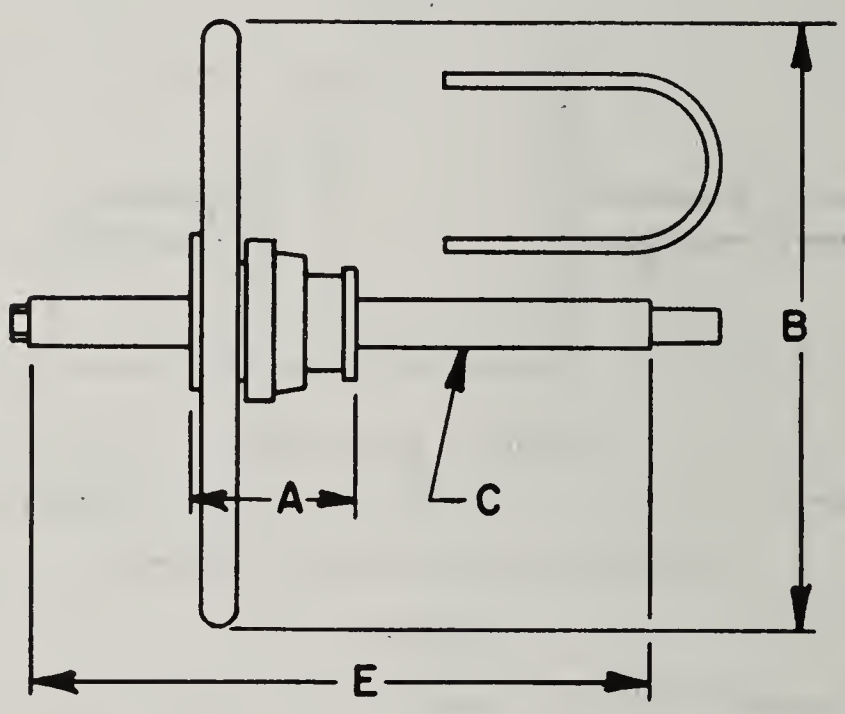

5

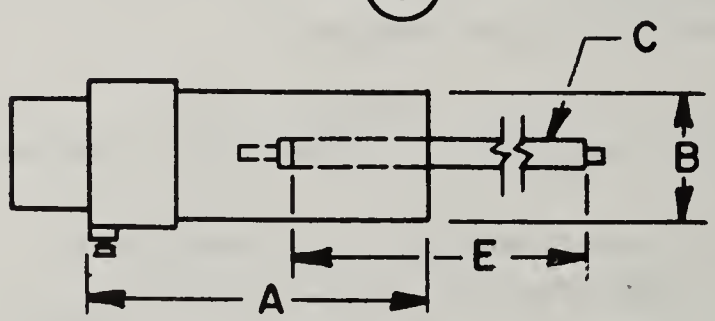

6

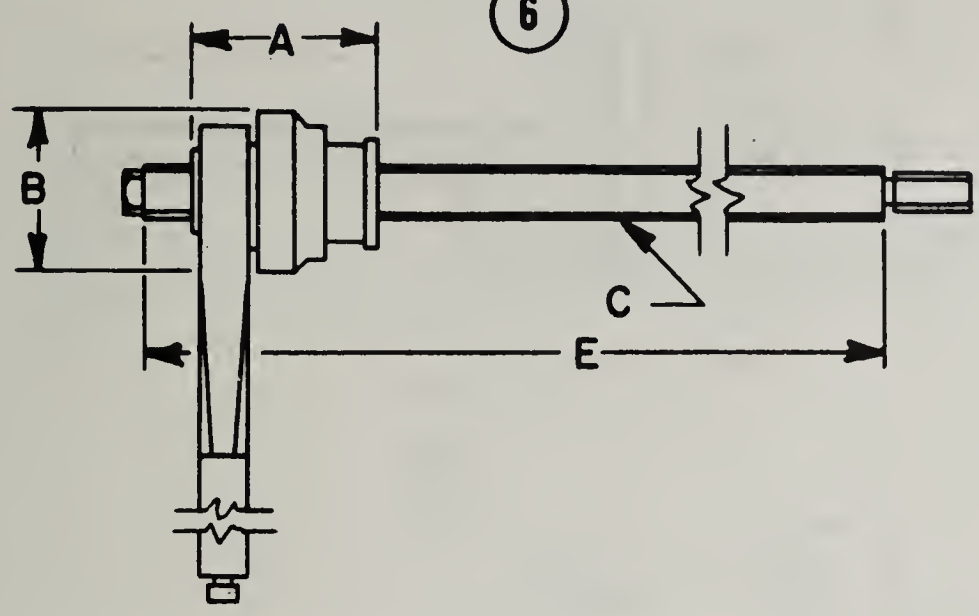

7

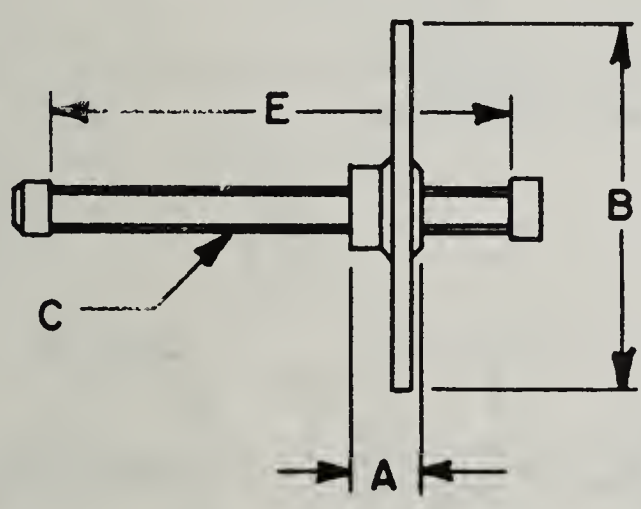

8

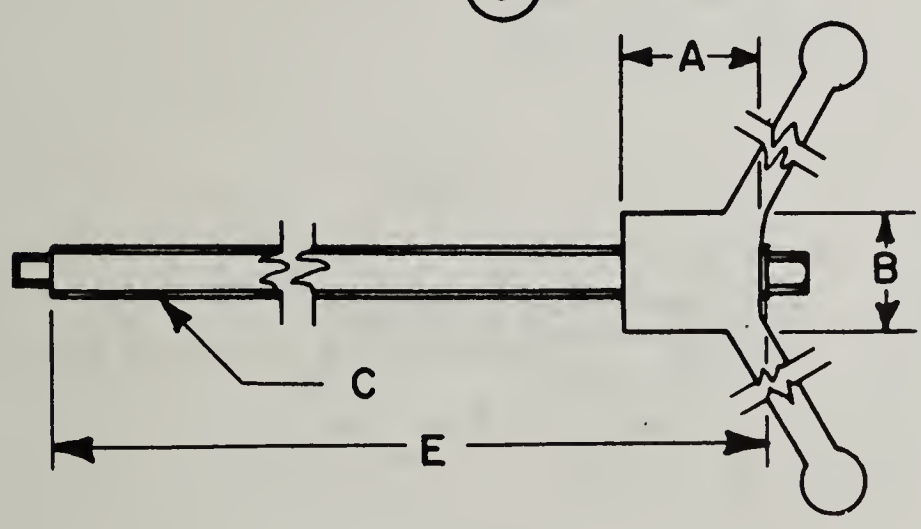

Ref Dwg Group 425	PART 3 Federal Item Identification Guides for Supply Cataloging

9

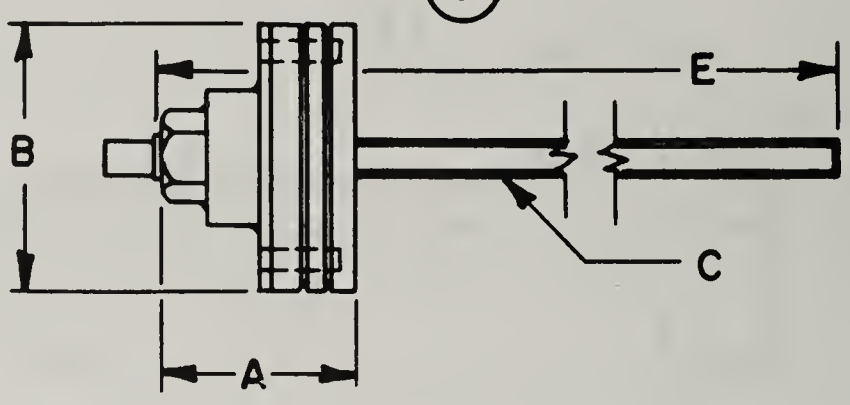

10

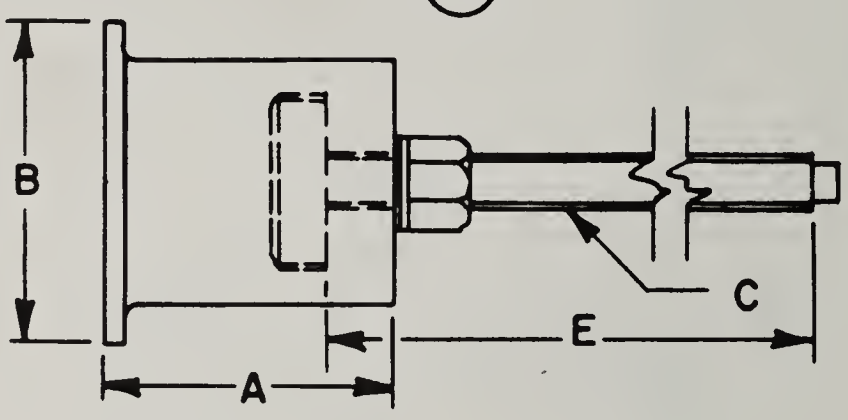

11

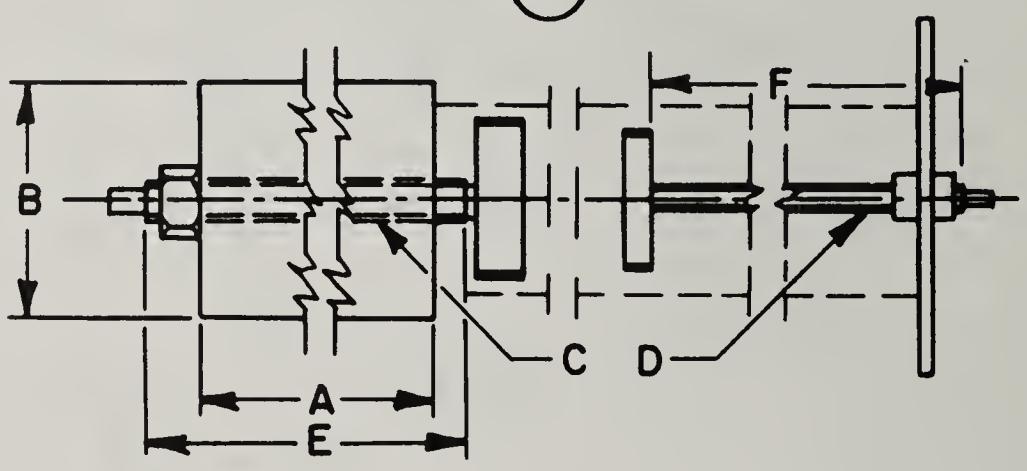

12

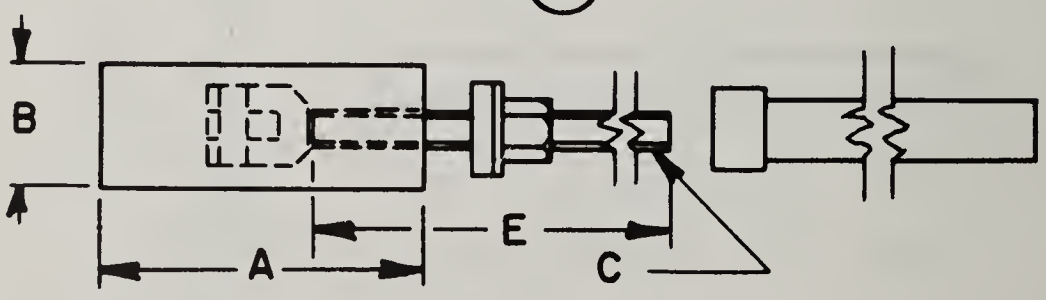

13

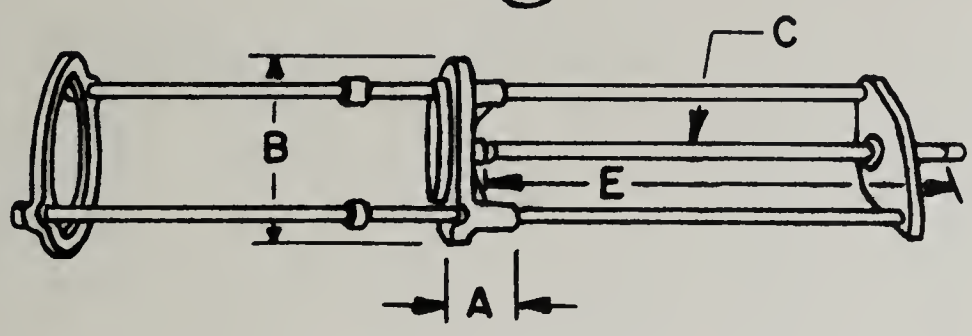

14

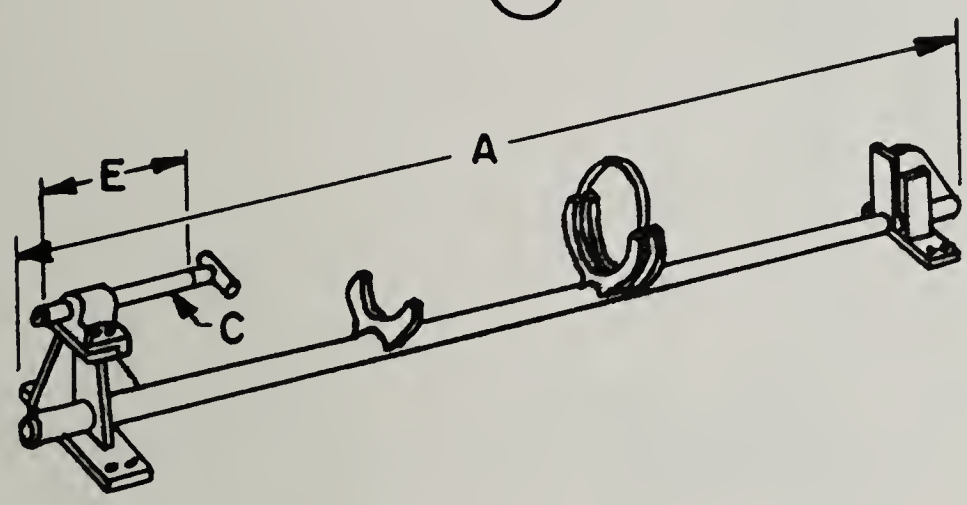

Boresight Alignment Target Assemblies

Section A — Assemblies

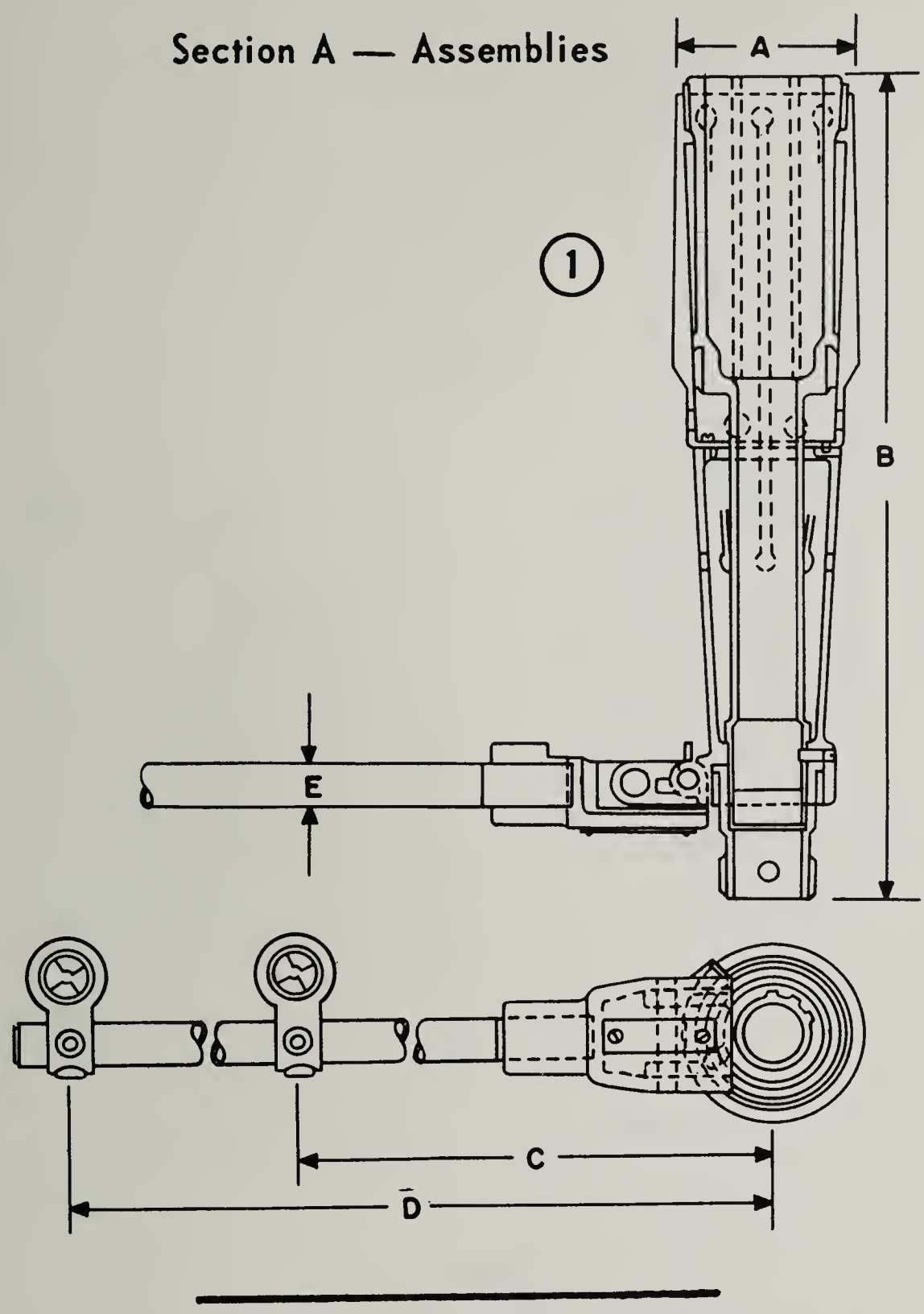

LEGEND

A—Outside diameter of mandril bearing surface
B—Over-all length of mandril
C—Distance center of mandril to center of 1st target
D—Distance center of mandril to center of 2nd target
E—Diameter of target support arm

Section B — Holders

1

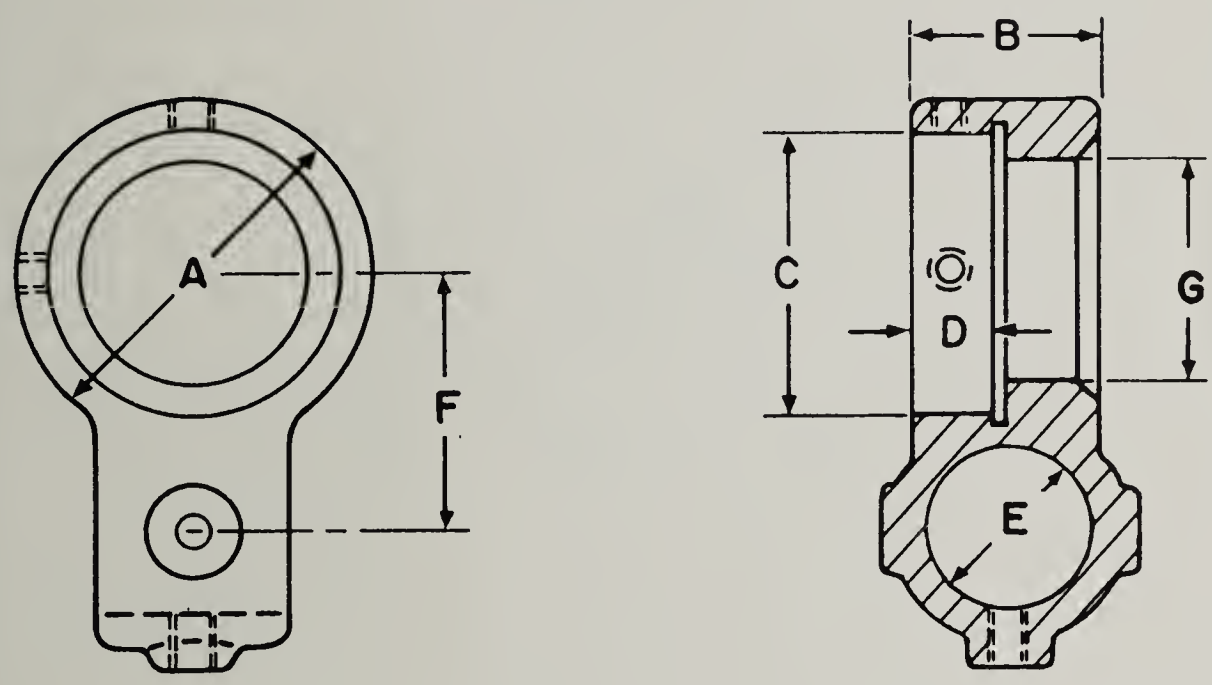

LEGEND

A—Outside diameter of target holder

B—Width of target holder

C—Inside diameter of target recess

D—Depth of target recess

E—Diameter of mounting hole

F—Height from center of mounting hole to center of target

G—Diameter of target aperture

Section C — Targets

1

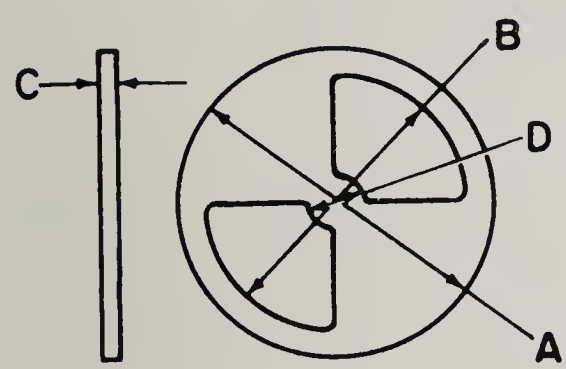

LEGEND

A—Outside diameter

B—Inside diameter of open quadrants

C —Thickness of material

D —Diameter of target center

Section D — Cells

1

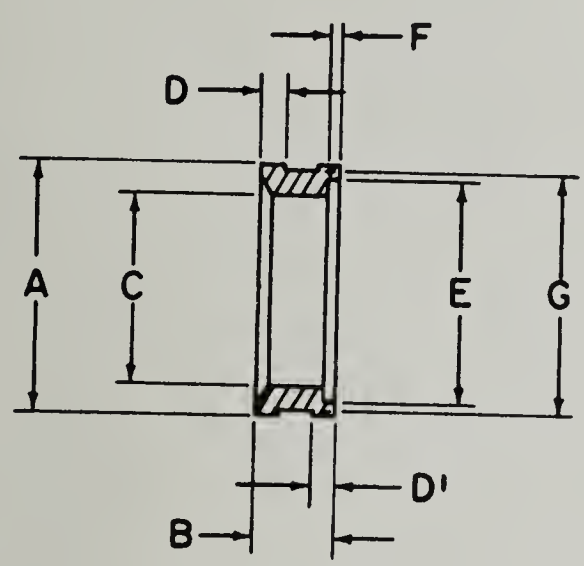

LEGEND

A—Outside diameter
B—Length
C—Inside diameter
D—Width of flange

Note.—If flanged on both ends, give large dimensions for legend letter "D", and smaller dimensions for "D1".

E—Inside diameter of target recess
F—Depth of target recess
G—Diameter of body

* U.S. GOVERNMENT PRINTING OFFICE : 1961 O— 622393